The World Leader in
Cold-Formed Steel Trusses

TrusSteel®

a division of ITW Building Components Group

Truss Design Manual

TRUSS DESIGN MANUAL

TABLE OF CONTENTS

1 OVERVIEW

1.01 Introduction
1.02 Specifiers & Designers
1.03 Contractor & Installer
1.04 Truss Components & Code Recognition
1.05 Framing & Connections
1.06 Authorized TrusSteel Fabricators
1.07 Education & CES
1.08 Notes Page

2 APPLICATIONS

2.01 Applications
2.02 Projects

3 SPECIFYING / DESIGNING

3.01 Overview
3.02 Building Codes & Design Standards
3.03 Information Required for Truss Design
3.05 TrusSteel System
3.07 Wind Loading
3.10 Snow Loading
3.11 Seismic Loading
3.13 Sound Control
3.14 Sustainability & LEED
3.15 Fire Resistance & UL
3.16 Trusses as Building Components
3.17 Roof Truss Systems - Framing
3.22 Roof Truss Systems - Sample Spans
3.23 Floor Truss Systems
3.26 Guide Specifications

4 ENGINEERING / SHOP DRAWINGS

4.01 Engineering
4.03 Shop Drawings
4.04 Notes Page

5 DETAILS / CONNECTIONS

5.01 Overview
5.03 Standard Details
5.04 Truss-to-Truss Connections
5.06 Gable Outlooker Connections
5.07 Truss-to-Bearing Connections
5.13 Piggyback and Valley Truss Connections

6 TRUSS FABRICATION / QUALITY

6.01 Overview

7 INSTALLATION / BRACING

7.01 Site Conditions & Safety
7.02 Handling & Storage
7.03 Lifting & Staging
7.04 Bracing
7.05 Rafting

8 REFERENCES / RESOURCES

8.01 Industry Resources
8.02 Glossary
8.07 Weights of Materials

© Copyright 2012 ITW Building Components Group, Inc.

This Design Manual is intended as a guide to building professionals for suggested uses of TrusSteel trusses. The building code of jurisdiction and a truss design professional should be consulted before incorporating information from this publication into any plan or structure.

ITW Building Components Group, Inc., nor any of its divisions or companies, does not warrant the recommendations and information contained herein as proper under all conditions and expressly disclaims any responsibility for damages arising from the use, application or reliance on the recommendations contained herein.

1206

NOTES

Unmatched strength and stiffness in a cold-formed steel truss.

TrusSteel is the most accepted, most specified cold-formed steel (CFS) truss system on the market today. No other building component combines strength, stiffness, fire resistance, insect resistance and design flexibility so well.

The unique, patented truss chord shape and Double-Shear™ fasteners, combined with multiple types of web shapes, make TrusSteel CFS trusses, pound-for-pound, the strongest and stiffest cold-formed steel trusses on the market. Not surprisingly, these same characteristics combine to create a light, economical steel building component having exceptional load-span capabilities, with clear spans in excess of 80 ft.

Supported by powerful Alpine steelVIEW™ design and analysis software, TrusSteel CFS trusses provide reliable, economical structural solutions for almost every roof or floor application.

ALPINE TrusSteel®

A Division of ITW Building Components Group, Inc.

The Most Trusted Name in CFS Trusses

American Iron and Steel Institute

Steel Framing Alliance™

CFSC Cold Formed Steel Council

CFSEI COLD-FORMED STEEL ENGINEERS INSTITUTE

Alpine Engineered Products, Inc. was a driving force in the creation of the wood truss industry over forty years ago. Since that beginning, the industry has consistently recognized Alpine as engineering and innovation leaders. Now, as a part of the ITW Building Components Group, Inc. Alpine provides the same leadership in the founding and development of the pre-engineered CFS truss industry.

The TrusSteel Division has decades of combined expertise in the truss and CFS building products industry. The TrusSteel product line combines over forty years of truss engineering and software knowledge with cutting-edge rollforming technology and the proven quality of in-house truss fabrication. As a result, more TrusSteel trusses are installed each year than any other proprietary CFS truss system.

TrusSteel provides ongoing leadership to the truss industry through hands-on participation in key organizations such as the Cold-Formed Steel Engineers Institute (formerly LGSEA), the American Iron and Steel Institute, the CFS Council of the SBCA, the AISI Committee on Framing Standards (COFS), and the Center for Cold-Formed Steel Structures.

TrusSteel is actively involved in programs with the International Code Council and Underwriters Laboratories.

Every TrusSteel truss is designed using the industry-leading Alpine steelVIEW software. steelVIEW is the most accurate truss design software in the industry for a number of reasons, including:

- True multi-node modeling, not the estimated node modeling used by other CFS truss design software packages.
- Multiple load case analysis applied to each truss, including gravity, wind, seismic and unbalanced conditions.
- Analysis methodologies derived from the most extensive full-scale testing program in the industry, utilizing the AISI *Specification for the Design of Cold-Formed Steel Structural Members*.

Authorized TrusSteel Fabricators, operating the steelVIEW software in-house and supported by TrusSteel engineering resources, provide solutions for the most complex truss systems.

This Manual is intended for quick reference only. Drawings and illustrations shown are samples only and are not intended for detailing or construction. Please refer to the TrusSteel Standard Details for technical information on connection design, product use and safety.

Specifiers & Designers

Project Phoenix - rebuilding the Pentagon after 9-11

PGA Headquarters, FL

The Inn at Biltmore Estate, Asheville, NC

Design Flexibility

Outstanding design flexibility

TrusSteel CFS trusses provide the same span capabilities and design flexibilities as wood trusses. The pre-engineered system allows much greater design flexibility than steel "C" truss framing. As a result, you can design in familiar roof lines - pitched or flat, with hips, gables, gambrels, monos, mansards, cantilevers, overhangs, scissors and floor trusses. This design flexibility makes TrusSteel trusses ideal for almost any building type: new construction, retrofit, commercial, institutional, military, educational, industrial and municipal structures.

Easy to specify and design

There is a wealth of information available to help you specify and design with TrusSteel. A guide specification in CSI format, and standard details in DXF and DWG formats, can assure that your specs and construction documents are accurate and complete. UL, ICC Legacy report (NER) and Florida Product Approval are available to assist you in making design decisions and in working with code officials. Local TrusSteel fabricators can aid you in making informed decisions about project designs and costs.

Responsible products

TrusSteel CFS trusses contribute to a safe built environment. They do not emit moisture or fumes during their life cycle. They are resistant to insect attack, and do not provide a medium for the growth of mold. And most of the steel used for CFS framing is recycled steel.

Recognized fire resistance

Noncombustible TrusSteel trusses provide integral, recognized fire resistance that does not fade with time. See the following pages for a list of TrusSteel's useful, cost-saving UL-listed roof and floor assemblies.

Assured structural performance

With over forty years of experience in the truss industry, you can be assured that TrusSteel understands the structural performance of trusses. The powerful steelVIEW™ truss design software analyzes each truss individually using the latest industry standards, guided by the new ANSI/AISI/COFS -*Standard for Cold-Formed Steel Framing -Truss Design*. Finally, each truss design is reviewed and sealed by a TrusSteel Professional Engineer.

Quality trusses

TrusSteel CFS trusses are built in a shop environment with experienced fabrication personnel. TrusSteel endorses industry truss shop quality control standards as developed by the Cold-Formed Steel Council.

Economical system

Since TrusSteel CFS trusses are the stiffest trusses in the industry, less permanent bracing is typically required in the truss system. This feature, combined with excellent performance at 4 ft. on-center spacings or greater, can reduce the cost of the installed truss system through reduced labor costs, materials and project duration. Property insurance premium discounts may provide long-term savings.

Nationwide availability

TrusSteel supports the largest network of independent CFS truss fabricators in the industry. This nationwide network assures that TrusSteel trusses are available for your projects in every region of the United States.

Contractor & Installer

Contractor-Friendly Installation

Safer to Handle

Unique features of TrusSteel trusses make them safe to handle and install. Stiffer trusses add handling control and reduce the danger of buckling during lifting and placement. The rolled edges of the chords and webs help protect workers from cuts.

Easier to Install

TrusSteel trusses can be as light as one-half the weight of similar wood or "C" stud steel trusses. Unlike some other CFS trusses, laterally stiff TrusSteel trusses resist folding or "butterflying". And TrusSteel trusses work exceptionally well in rafted installations.

No Special Tools Required

The tools you are now using to install CFS framing are all you need to install TrusSteel trusses. A full line of TrusSteel construction hardware allows you to make connections with standard screws. Installation details and construction hardware are available from your Authorized TrusSteel Fabricator.

Reduced Callbacks

TrusSteel trusses reduce callbacks because they start straighter and remain straighter than many other types of trusses. And the dimensional stability of steel reduces drywall fastener pops.

Save Time, Effort and Money

TrusSteel trusses streamline the building cycle and save money.

- Timely quotations from local TrusSteel Authorized Fabricators provide competitive prices and define project costs up front.
- Sealed engineering drawings and code-compliant components expedite submittals.
- Quicker turn-arounds for revisions.
- Delivered to the site ready to install, shop-built trusses save days of labor.
- Faster truss installation with accurate layouts, extensive details, and a full line of installation hardware.
- Easier site inspections with comprehensive shop drawings and clearly identified components.

Delivered Quality

Roof lines plane accurately, eaves and soffits align properly, and interior ceiling lines are flat and true. High-quality TrusSteel trusses help you achieve your quality goals.

Delivered Value

From bidding to punch list, TrusSteel delivers value to your project through increased safety, quality, efficiency and cost-effectiveness.

Truss Rafting

What is Rafting?

Truss rafting is a framing technique where completed trusses, designed to be rafted, are assembled into an entire roof section on the ground and then lifted as an assembly onto the building structure. The assembly can consist of just the trusses, or the trusses plus purlins, roof deck and final roofing which is all installed on the ground before the assembly is lifted into place. Employing a rafting technique can save time, increase safety and reduce insurance costs on many projects.

Why Raft With TrusSteel?

The exceptional strength-to-weight characteristics and lateral stability of the TrusSteel trusses make them the ideal truss for use in a rafting process. These characteristics allow an average-sized crane to lift the completed truss assembly into position. The stiffness and stability of the TrusSteel trusses create an assembly that will survive a lift without introducing significant additional bracing.

Truss Components & Code Recognition

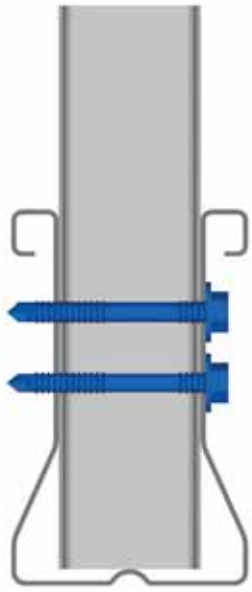

Truss Components

Unique Chord Sections

The symmetrical shape of TrusSteel's patented U-shaped chord sections provides nearly equal chord member moment capacity in both in-plane directions. The TrusSteel chord members have superior bending strength in out-of-plane directions. These characteristics combine to create an efficient truss that is exceptionally strong and stiff. The recent addition of special chord sections for short span / low load conditions and for long span / high low conditions improves the value engineering of the entire system.

Webs

TrusSteel utilizes both commercial grade closed-tube webs and proprietary roll-formed z-webs to deliver the most cost effective roof system. Both products have unique "double symmetric" properties which contributes to the strength, stiffness and stability of the truss as well as reducing lateral bracing.

Patented Fasteners

TrusSteel is the only CFS truss system in the industry using Double-Shear™ fastener technology. This patented technology provides a rigid, bolt-like connection at all chord/web intersections and is specially designed to resist movement and back-out. Color-coded, marked fasteners create the most dependable, easily inspected connection available for CFS materials.

Structural Connections

TrusSteel delivers a full line of truss-to-truss and truss-to-bearing connectors that provide consistent quality and structural values.

The industry's most extensive library of Standard Details describing our connections, connectors and section properties is available in various CAD formats on CD or from www.TrusSteel.com.

Code Recognition

TrusSteel members are designed and built in compliance with ASTM A370, ASTM A653, ASTM A500, ANSI Standards, and voluntary standards as described in our own reports from Underwriters Laboratories (UL) and ICC Legacy reports (NER and Florida Product Approval). Visit our web site to download the complete reports.

UL Listings Assemblies

TrusSteel products qualify for hourly ratings as shown below.

UL Design #	Assembly	Hourly Rating	Gypsum Board Assembly
P515 (Pitched Roof)	R,U	1	Double layer of 5/8" Type C
P525 (Pitched Roof)	R	1, 1-1/2, 2	Single layer of 5/8" Type C
P525 (Pitched Roof)	U	1, 1-1/2	Single layer of 5/8" Type C
P525 (Pitched Roof)	U	2	Double layer of 5/8" Type C
P256 (Pitched Roof)	R,U	1	Single layer of 5/8" Type C (I.C.)
P526 (Pitched Roof)	R,U	1-1/2	Double layer of 5/8" Type C (I.C.)
P540 (Pitched Roof)	R,U	1	Single layer of 5/8" Type FSK-C or FSW-C or FSW-G (I.C.)
L551 (Flat Truss/Floor)	U	1	Single layer of 5/8" Type C (I.C.)
L565 (Flat Truss/Floor)	U	1	Single layer of 5/8" Type FSK-C or FSW-C or FSW-G (I.C.)
G542 (Flat Truss/Floor)	R,U	1	Single layer of 5/8" Type C (I.C.)
G542 (Flat Truss/Floor)	R,U	2	Double layer of 5/8" Type C (I.C.)

R = Restrained, U = Unrestrained, I.C. = Insulated Cavity

Framing & Connections

Standard Details

HANGER DETAILS

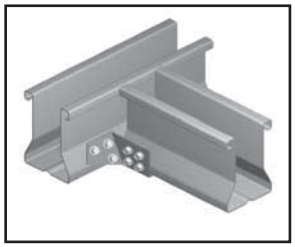

Bottom chord bearing truss to girder truss

UPLIFT ATTACHMENT TO STEEL

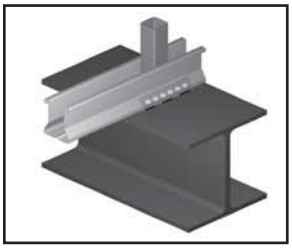

Bottom chord bearing truss to steel beam connection

UPLIFT ATTACHMENT TO STEEL

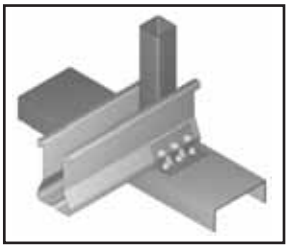

Bottom chord bearing truss to CFS track connection

UPLIFT ATTACHMENT TO CONCRETE

Bottom chord bearing truss to concrete bearing

SPRINKLER PIPE HANGER

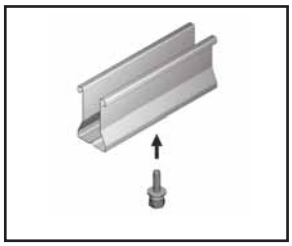

Bottom chord sprinkler pipe hanger using Sammys x-Press 35 (XP 35)

SPRINKLER PIPE HANGER

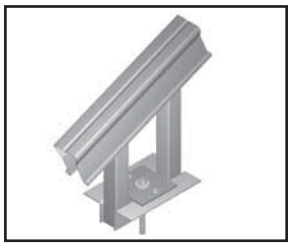

Truss top chord hanger detail

TrusSteel Connectors

An extensive set of TrusSteel connectors and application details allows a designer to create a complete truss framing system, whatever the roof type, supporting conditions or other framing materials. All TrusSteel connectors are load-rated connectors.

Refer to Section 5 of this manual for the engineering values of our full line of connectors (simplified examples are shown here). TrusSteel Standard Details are available for each connection application. These Details include load data as well as installation requirements. Standard Details are available in CAD formats from www.TrusSteel.com and are also contained on the electronic version of this manual.

Truss ShopDraw™ and Layout™ Information

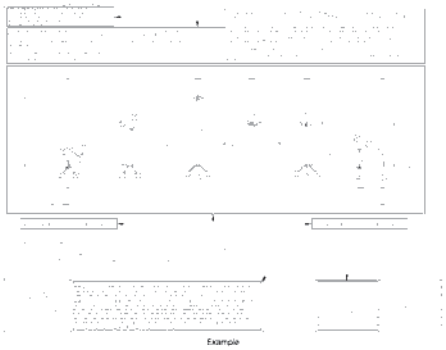

SteelDraw Truss Shop Drawings with:

- All trusses marked and coordinated to layout
- All truss members clearly identified
- Complete general notes
- Fully dimensioned truss profile with bearing elevations, fastener quantities, pitch marks, web bracing locations and more
- Truss reactions and bearing widths
- Job-specific loads

Layout Drawings with:

- Truss marks
- Key bearing and framing dimensions
- Truss spacings
- Connection and bracing details

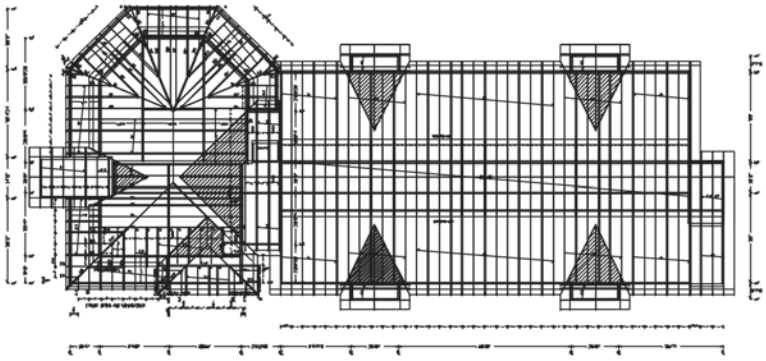

Authorized TrusSteel Fabricators

Who is a TrusSteel Authorized Fabricator?

A TrusSteel Authorized Fabricator is an independently-owned and operated local truss fabrication shop. Each Fabricator markets and services truss projects in their own region, backed by over 40 continuous years of Alpine truss experience. Taken together, the nationwide network of TrusSteel Authorized Fabricators forms a vast repository of truss and framing knowledge at your disposal.

What services can an Authorized Fabricator provide?

Knowledge. TrusSteel Authorized Fabricators are truss experts. They can answer questions about truss applications and installations as well as questions about pricing and delivery. Do you have questions about truss layouts, spans, spacings, profiles, systems, connections, bracing, overhangs, mechanical chases...and more? Call your local Authorized Fabricator. They can save you money up front in your design development or structural design process.

Engineering. All TrusSteel trusses are engineered trusses. An Authorized Fabricator can provide not just building components, but can also provide individually-engineered and sealed trusses. A staff of over fifty engineers, covering every state in the USA, reviews and seals over 4,500,000 truss designs each year.

TrusSteel provides steelVIEW™ software to all Authorized Fabricators. This powerful proprietary software package includes 3-D modeling and truss layout, truss engineering and bidding modules. By-products of these key elements are industry-best truss layouts, shop drawings and cutting sheets.

Quality trusses. Each Authorized Fabricator builds TrusSteel trusses in a plant environment to ensure the highest quality components. Trusses are built according to engineered shop drawings and highly accurate cutting/assembling drawings created by the steelVIEW software. TrusSteel trusses are built with patented Double-Shear™ fasteners and internal connectors to assure consistently accurate trusses.

How can I find local Authorized Fabricators?

You can find a list of Authorized Fabricators on the TrusSteel Web site at www.TrusSteel.com. Or, you can call the TrusSteel information line at 888-565-9181. Wherever your project is located, you can probably find at least two Authorized Fabricators to provide competitive quotes on your project.

Additional Services

Structural Services. Through their affiliation with strategic partner BBD Engineering & Design Firm, LLC (www.bbdengineering.com), a fee-based, full-service consulting engineering firm, TrusSteel Authorized Fabricators can provide full framing system design services (including the design of special connections, bracing, purlins, decks - even entire building framing systems).

Educational & CES

Attention: Project Architects and Engineers

The TrusSteel Division has several educational presentations that we can make in your office or at the local chapter of your professional organization.

The "Cold-Formed Steel Trusses 101" and "Bracing for Steel Trusses" presentations are accredited by the American Institute of Architects under their Continuing Education System. AIA members who participate will receive one LU Hour of credit, and TrusSteel will file Form B with the AIA. All other participants will receive a Certificate of Completion.

Target Audiences
Architects, engineers, specifiers and other design professionals in the building market; can be presented to any size audience.

AV Needed
Electrical power and a screen for PowerPoint (CES facilitator will provide the laptop computer, video projector and samples).

Other Presentations
Other non-accredited presentations are available, suitable for various venues. Contact your TrusSteel Regional Manager for details.

Facilitator Qualifications
TrusSteel facilitators have extensive experience in the truss and building industries and are well versed in truss design and installation.

Cold-Formed Steel Trusses 101

Length: One Hour
Credits: One LU Hour
HSW: Yes
Cost: None

Description
This presentation includes a brief history and overview of the various types of cold-formed steel (CFS) truss systems on the market, their physical and structural characteristics and performance, common system applications and limitations, and how to specify these systems.

Learning Objectives
At the end of this program, participants will be able to:
- Identify the different types of CFS truss systems,
- Understand the product capabilities and limitations of various CFS truss systems,
- Specify a CFS truss system.

How Taught
Using a PowerPoint presentation and physical samples, the CES facilitator presents information on the nature and types of CFS truss systems, including basic terminology and applications. Physical samples are used to demonstrate truss terminology.

Bracing for Steel Trusses

Length: One Hour
Credits: One LU Hour
HSW: Yes
Cost: None

Description
This presentation includes an overview of the various types of cold-formed steel (CFS) truss systems on the market, common loading situations, structural construction bracing needs and how to specify the bracing for these systems.

Learning Objectives
At the end of this program, participants will be able to:
- Identify the different types of CFS truss systems,
- Understand common load conditions,
- Specify the bracing for a CFS truss system.

How Taught
Using PowerPoint and physical samples, the CES facilitator presents information on the nature and types of CFS truss systems, including basic terminology and applications. Physical samples are used to demonstrate truss terminology.

Notes

Your imagination is the only limit

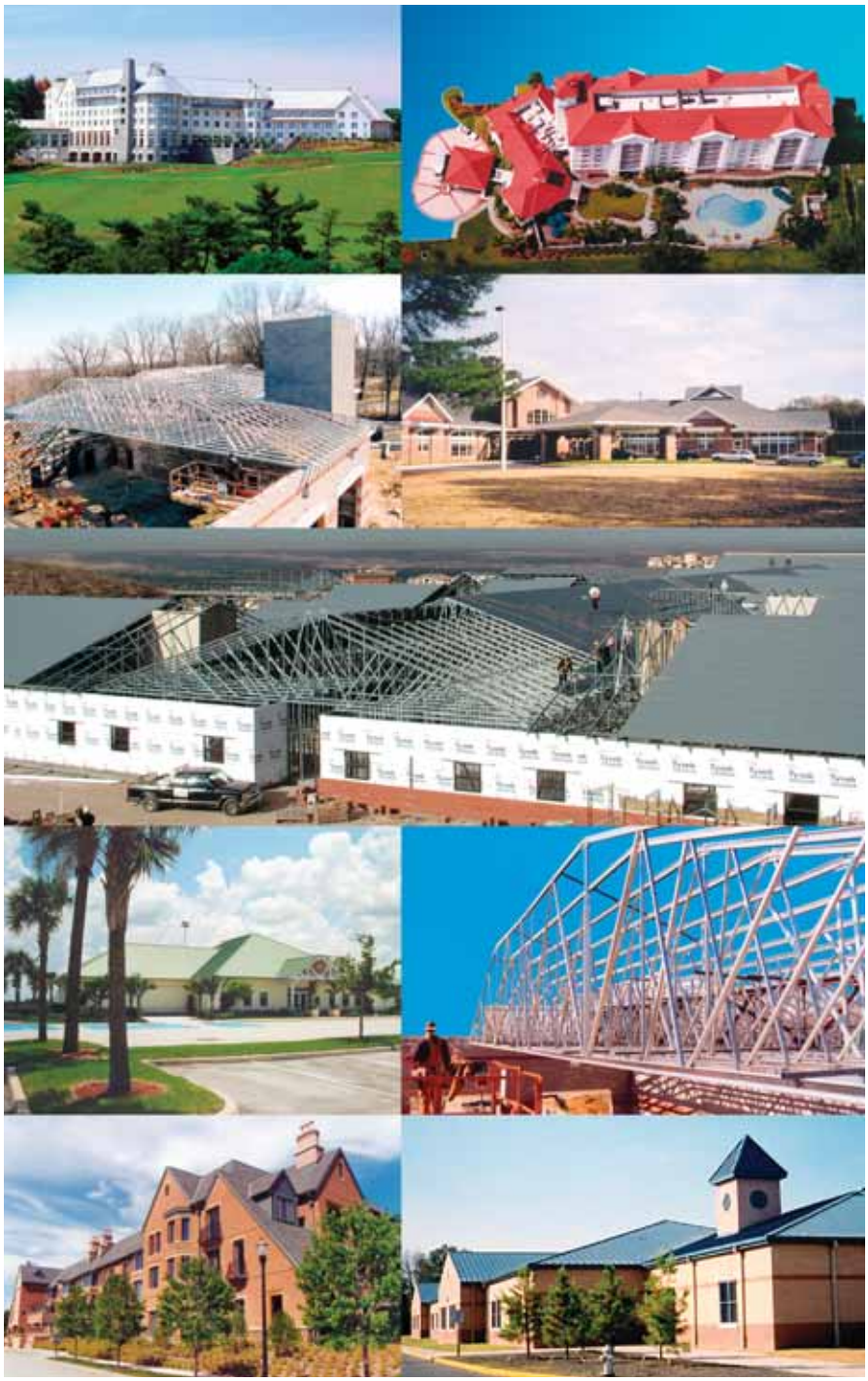

TrusSteel Cold-Formed Steel (CFS) trusses are now in service within literally thousands of buildings, in dozens of building applications.This guide shares only a small fraction of the total uses of TrusSteel. You can view additional information on these case studies and other studies on the TrusSteel web site: www.TrusSteel.com.

TrusSteel trusses can be used to create roofs and floors of all types (gables, hips, monos, gambrels, etc.). They can be used in many special applications, including:

- Re-roofs (over existing structures)
- Equipment screens
- Porte cocheres
- Ag structures
- Flat roofs
- Canopies
- Mansards
- Shelters
- Frames

Institutional – Schools – Universities – Churches – Museums – Healthcare – Clinics – Hospitals – Assisted Living Centers – Retirement Centers – Municipal – Community Centers – Town Halls – Hospitality – Hotels – Motels – Commercial – Malls – Banks – Truck Stops Telecommunications – Shopping Centers – Restaurants – Historical Renovation – Industrial – Storage – Roof Refit - Condominiums Multi-Family – Single-Family – Recreation – Ball Parks – Gaming – Government/Military – Barracks – Depots – Offices

Military

The Pentagon
Project Phoenix
Arlington, VA

Reconstruction of the Pentagon began immediately after 9-11, with all parties committed to completing the restoration within 12 months. The Pentagon reopened on-time, on-budget, on the very hard work and cooperation of everyone involved.

Davis-Monthan AFB
New Dormitories
Tucson, AZ

Seven entire roofs were built on the ground and lifted into place, complete with trusses, bracing, decking and mechanicals. This installation technique is called rafting. See Section 7 for more information.

Estimated time savings on the project: two weeks.

Fort Wainwright
New Lodging Facilities
Fairbanks, AK

Rafting (assembling entire sections of the roof system on the ground and lifting into place) allowed this contractor to meet deadlines set by the short building season in Alaska. Structural design of the truss system, lifting bracing, permanent bracing and all connections was done by TrusSteel.

Hospitality / Eldercare

The Inn on Biltmore Estate
Luxury Hotel
Asheville,NC

Over 35,000 SF of TrusSteel trusses top the new Inn on Biltmore Estate. Located on a national historic site, quality and ease of installation were of paramount importance to the owner.

Unusual framing situations, including radial and conical roof areas, provided challenges met by the truss fabricator and TrusSteel engineering team.

Design Flexibility

The pre-engineered TrusSteel system allows much greater design flexibility than steel "C" truss framing. As a result, you can design in familiar roof lines - pitched or flat, with hips, gables, gambrels, monos, mansards, cantilevers, overhangs, scissors - as well as floor trusses. This design flexibility makes TrusSteel ideal for almost any building type.

Noncombustible TrusSteel trusses provide integral, recognized fire resistance that does not fade with time. Useful, cost-saving UL Listed roof and floor assemblies can help you meet the needs of demanding building types, owners and codes. For more information on UL Listed assemblies, see Section 3 of this Manual.

The Garlands
Assisted-Living Community
Barrington, IL

Over 150,000 SF of TrusSteel trusses helped to create the "French Country" style of this campus. One of the many TrusSteel UL Listed assemblies met the architect's and owner's requirements for fire protection.

Municipal / Institutional

Golden City Station
Fire Station
Louisville, KY

The design of this fire station required long, clear spans and noncombustible framing. The truck bay areas were covered with 85-foot clear span TrusSteel trusses. For ease of shipment, these trusses were shop fabricated in two halves that were then connected together in the field by the installer.

PGA Headquarters
Historical Center
Port St. Lucie, FL

The new showpiece of the Professional Golfers Association headquarters campus is the PGA Historical Center. TrusSteel trusses were selected for their high quality and overall economy of installation.

Coral Baptist Church
New Church Complex
Coral Springs, FL

The truss systems for the many roofs over this new worship, education and fellowship complex contained just about every type of truss under the sun. There were piggybacked trusses, flats, drags, hips, commons, monos and radials - with about every bearing condition imaginable, including heavy steel, CFS steel, bar joists and masonry. Because of the design flexibility of TrusSteel CFS trusses, they interfaced well with all these types of framing systems.

Industrial / Educational / Residential

Freightliner Research Facility
Wind Tunnel
Swan Island, OR

Collaboration between engineers at Freightliner, TrusSteel and the local truss fabricator resulted in a state-of-the-art design framed completely from TrusSteel products.

Alleghany Highlands Schools
Elementary and Middle Schools
Lowmoor, VA

This campus of new elementary and middle schools included over 112,000 SF of TrusSteel trusses. TrusSteel cold-formed steel (CFS) trusses offer the features of non-combustibility, UL-Listed assemblies and recycled content demanded on many school projects.

Schnee Residence
Scottsdale, AZ

Over 12,000 SF of TrusSteel trusses shelter this new home in the desert. Fifty-foot trusses framed in a radial pattern created large, open living areas.

TrusSteel CFS trusses are among the lightest and strongest steel framing made. They are an excellent alternative to heavier steel framing and trusses, such as “C” stud trusses or stick framing. Because of their superior lateral stiffness and high strength-to-weight ratio, TrusSteel common trusses, in short spans, may be lifted and installed without the use of a crane. This can provide a significant benefit on small projects or structures built in areas with limited access.

Specifications & Design Overview

As a tool for the specifier, a complete Guide Specification for TrusSteel, written in standard three-part format, is available on the CD version of this manual.

Specifying CFS Trusses

Pre-Engineered Trusses

Cold-Formed Steel (CFS) trusses should be specified as “pre-engineered” trusses. The term "pre-engineered" reflects the concept of a desired outcome, where the individual trusses have been fully analyzed and engineered to meet all specified load conditions. Individual truss designs should be sealed by a Professional Engineer who is registered in the state where the project is located.

Pre-Fabricated Trusses

CFS trusses should also be specified as “pre-fabricated cold-formed steel (CFS) trusses”. Trusses should be fabricated in a shop environment with experienced fabrication personnel. Trusses that are fabricated at the job site should not be allowed. TrusSteel endorses industry truss shop quality control standards as developed by the SBCA’s Cold-Formed Steel Council.

The terminology “cold-formed steel” is replacing the old terminology of “light gauge steel” for several reasons. In the code standards for these products (AISI, COFS, ICC, etc.), these products are now referred to as cold-formed steel. In addition, the gauge system of referencing material thicknesses is becoming obsolete and has been replaced with mil thickness designations.

Industry Standards

The specifier should assure that all applicable industry standards are referenced within the project specification. All applicable loads and load conditions, as well as all other performance criteria, applicable codes, building use and geometry, etc. should be clearly defined within the specifications and project design drawings. For a further discussion on required information, please see “Information Required for Truss Design”.

Design and Review Process

Requirements

Due to its importance in the overall success of a project, it is worth repeating that the Building Designer must clearly state, in the plans and specifications, all specific requirements for the trusses. This clear and thorough communication of performance criteria will help truss suppliers, general contractors and truss installers provide more accurate pricing, preliminary designs, and ultimately a better product on the project.

Truss Design

Project plans and specifications will eventually be sent for pricing to companies involved in the manufacture of CFS trusses. After a truss manufacturer is awarded the project, the actual design of the truss system will begin. The truss manufacturer will use the plans and specifications to create an economical truss framing package.

Truss Package Submittal

Once the truss designs have been completed and sealed by a professional engineer, the designs will be submitted to the Building Designer for review and approval. If the Building Designer is satisfied with the truss submittal, then the truss manufacturer will begin fabricating the trusses. If the Building Designer is not satisfied, the truss submittal will be rejected and returned to the truss manufacturer along with precise instructions on corrective action. The truss manufacturer will make the necessary corrections and then resubmit the trusses to the Building Designer. This process will continue until the Building Designer approves the truss submittal package.

Approval, Fabrication and Delivery

Once the Building Designer approves the truss submittal package, the truss manufacturer will begin the fabrication of the trusses. After fabrication, the trusses will be delivered to the jobsite, ready to be installed on the building.

Building Codes & Design Standards

AISI / COFS Standards

The AISI/COFS has developed eight standards that are in use today:

- *General Provisions* (AISI-S200)
- *Code of Standard Practice* (AISI-S202)
- *Wall Stud Design* (AISI-S211)
- *Header Design* (AISI-S212)
- *Lateral Design* (AISI-S213)
- *Truss Design* (AISI-S214)
- *Prescriptive Method for One and Two-Family Dwelling* (AISI-S230)

Of the eight AISI standards listed above, General Provisions, Truss Design and the Code of Standard Priactice documents affect the design and fabrication of CFS trusses. These standards are subject to periodic revision. Please check the AISI Web site for the most current revisions.

Applicable Building Code

For many years, the vast majority of building construction within the USA was governed by one of three model building codes: UBC, SBC or BOCA. In recent years, these three codes have merged and been reborn as the International Building Code (IBC). The IBC, as developed by the International Code Council (ICC), has been adopted by municipalities and will be the applicable model code for the vast majority of construction within the USA.

The provisions of the applicable building code will provide important factors in the design of any given project. For this reason, one of the first steps a Building Designer should undertake in the design of any building is the precise identification of the applicable code. This concept may seem too obvious, but there can be different versions of the same building code (e.g. different publication dates) in use. There are also instances when a city or an entire state may decide to publish its own building code.

Requirements for Design Completion

Once the Building Designer has ascertained the applicable code, they can discover the minimum requirements for design completion that the municipality has set forth for its jurisdiction. Most municipalities state that they require a 100% complete design at the time of permitting.

Selecting the Structural System

One of the most important decisions made during building design will be the selection of the structural system. Once a system is selected, the Building Designer will go to the applicable code and find the provisions that will control the design of the structural elements. For CFS systems, the “Steel” chapter of the code will present these provisions.

The applicable building code will either completely outline the design procedures for a particular material or it will reference the required design standard. If a design standard is referenced, this will be clearly stated in the building code and the Building Designer can proceed to the “Referenced Standards” chapter to locate the proper design standard.

Design Standards

Model building codes contain provisions for the design of almost any type of building using many types of materials, including CFS. The International Building Code (IBC) will determine the design provisions for construction with CFS in two different ways. The first way is to provide explicit provisions that are published within the Code. The second way is to adopt existing standards by reference.

For the IBC to adopt a standard by reference, that standard must be developed according to guidelines created by the American National Standards Institute (ANSI). As with any building material, CFS members are designed according to standards developed by industry organizations that are intimately familiar with the design of CFS members. In the CFS truss industry, the American Iron and Steel Institute (AISI) is the organization that is ANSI-approved to develop standards. Within the AISI, there are two ANSI standards writing committees: the Committee on Specifications (AISI/COS) and the Committee on Framing Standards (AISI/COFS).

The AISI/COS has developed the primary standard for CFS design that is in use today: the *North American Specification for the Design of Cold-Formed Steel Structural Members* (AISI-S100). This standard outlines what types of steel shall be considered as CFS and how CFS members shall be designed when subjected to moment, shear and axial forces. The standards developed by the AISI/COFS use this document as their baseline for design procedures and expand upon specific issues of the given framing type.

Information Required for Truss Design

Truss manufacturers need certain specific information on every project in order to design and fabricate trusses. As a building designer, specifier or installer, you can help expedite your order and assure proper fit by providing the following information to the truss manufacturer.

Building Use

Building regulations differ for various types of use and occupancy. Specific classifications of use are: single family residential, multi-family residential, offices, retail, manufacturing, churches, institutions (long-term care, nursing homes, schools, hospitals, jails, etc.) or agricultural (non-human occupancy). There are also fire protection requirements for buildings that may require the CFS members and assemblies to perform in specific manners.

At times, the CFS truss system may be required to perform in an atmosphere that may be corrosive to CFS members. It is important to properly specify the level of protection that will be required to keep the underlying steel safe from damage by this atmosphere.

Applicable Building Code

Clearly identify the Applicable Building Code for the specific site location (also called the Building Code of Jurisdiction).

Geometry of the Structure

Furnish span (out-to-out of bearings, plus cantilevers, if any), slope, overhang conditions, etc. that form the profiles or external geometry of the trusses. Truss web configurations need not be furnished, as they are determined by the overall truss design.

Truss Bearings

Specify all exterior and interior points of bearing, showing location by dimensions, size, and elevation above ground or benchmarks. It is important to specify the type of bearing material to be used to properly design connections to the bearing. Required information could include grade of steel, grade of wood, strength of concrete, etc.

Truss Spacings

Give desired center-to-center spacings of trusses.

Truss Restraint

When designing trusses, it is important that the truss designer know how the truss chords will be restrained. The two most common methods of restraint are structural sheathing and purlins.

In the structural sheathing method, sheathing - most commonly plywood, oriented strand board (OSB), and metal deck (such as B-deck) - is applied directly to the truss chords. The design and connection of these decks to the trusses is the responsibility of the building designer.

In the purlin method, CFS members used as purlins are attached directly to the truss chord to properly support the truss chord laterally. CFS hat channels or Z shaped members are commonly used as purlins. This method is typically used when the sheathing material is not capable of spanning the distance between trusses. The design and connection of the purlin members is the responsibility of the building designer.

Support of Mechanical Equipment

Trusses under mechanical units must be specifically designed. If the building designer is relying on the sheathing to support the mechanical load or other heavy load, it is important that the building designer verify the sheathing thickness and capability. Mechanical loads may produce sufficient vibration to be considered in the truss design. Such loads may require additional trusses or custom design.

Information Required for Truss Design

Specified Design Loads

Trusses are required to transfer various types of loads down to the support structure. Ultimately all loads must be carried down to the foundation of the structure. Truss design (specified) loads include both live and dead loads which may be uniformly distributed or concentrated at various locations. These loads consist of gravity loads, wind loads, earthquake loads, snow loads, rain loads, etc.

Referenced within the IBC, the standard that deals with loads is the American Society of Civil Engineers (ASCE) standard, *Minimum Design Loads for Buildings and Other Structures*. The latest version of this standard is published in cooperation with the Structural Engineering Institute (SEI) and is referenced as SEI/ASCE7, or commonly as "ASCE7" where the last two digits reference the year the standard was published. ASCE7 is the reference standard that a Building Designer will use when determining what loads a building element must resist.

It is the responsibility of the Building Designer to specify all the loads that the framing members will encounter and communicate them to the truss designer. The truss designer will use those loads when designing the truss system, so it is very important that the specification of these loads be both thorough and clear.

Live/Environmental Loads: These loads are non-permanent loads. Examples include the weight of temporary construction loads and occupant floor loads. Environmental loads are produced by snow, wind, rain or seismic events, are usually uniform in their application, and are set by the building codes or the building designer. They will vary by location and use, and should be furnished in pounds-per-square-foot or other clearly defined units.

Dead Loads: Dead loads include the weight of the materials in the structure and any items permanently placed on the structure.

Special Loads: Special loads can be live or dead. Examples of special loads might include mechanical units, poultry cages, cranes, sprinkler systems, moveable partition walls, attic storage, etc. The weight, location and method of attachment must be provided to the truss designer. Multiple load cases may be required in truss design.

Special Conditions

- Jobsite conditions that may cause rough handling of the trusses.
- High moisture or temperature conditions.
- Extreme environmental exposures that may cause corrosion to CFS members.
- Use of trusses to transfer wind or seismic loads to the supporting structure.
- In-plane and out-of-plane loads, such as lateral loads, are examples of loads that are required to be transferred to the supporting structure.
- Fire resistance requirements.
- Higher adjacent roofs that may discharge snow onto lower roofs.
- Location from coastline, building exposure, building category and height above ground for wind.
- Parapets, signage or other obstructions that may cause snow drifting or prevent the free run-off of water from the roof. These types of building elements may also induce additional dead loads that must be applied to the trusses.
- Any other condition that affects the load carrying ability of the roof or floor framing.
- Floor trusses, office loads or ceramic tiles require special considerations during the building and truss design process.

Rebuilding the Pentagon

TrusSteel System

The unique, patented shape of TrusSteel chord members gives them exceptional strength and stiffness. Combined with the TrusSteel webs, connectors and the patented Double-Shear™ fasteners, these elements can create CFS trusses that have the highest strength-to-weight ratio in the industry.

Chord members

Chord members are available in three series: TSC2.75, TSC3.00 and TSC4.00. Available in a variety of material thicknesses, chords may be intermixed within a truss to achieve the most efficient truss designs. All steel conforms to ASTM A653 and A500 standards. See the table in this Section, and the TrusSteel Standard Details, for member properties.

Web Members

Web members are either closed welded rectangular steel tubes or patented, proprietary roll-formed z-webs. Members are available in many dimensions and thicknesses, and are used in trusses as needed for their individual strength and stiffness.

Typical pitch break connection

Pitch Break Connectors

Internal connections between truss chords are made using patented pitch break connectors. These internal connectors allow for the assembly of very consistent joints at critical points such as at the truss peak.

Installation Hardware

A full line of installation hardware is available for attaching TrusSteel trusses to steel, CFS, concrete and wood supports as well as to other trusses. All hardware components are load rated - see Section 5 for details.

Double-Shear™ Fasteners

TrusSteel trusses are assembled using the patented #14 Double-Shear self-drilling tapping fasteners. This technology provides a rigid, bolt-like connection at all chord-to-web intersections. Each fastener employs an integral washer and Anti-Backout™ technology to resist movement and back-out. Color-coded, marked fasteners create the most dependable, easily inspected connection available for CFS materials. These fasteners also allow the single-sided fabrication of trusses (truss assembly without "flipping" trusses). Refer to Standard Detail TS011 for allowable shear loads per fastener into various thicknesses of steel.

Galvanization

TrusSteel chords, webs and hardware components are galvanized for protection against corrosion during fabrication and installation. Most TrusSteel components have G-90 galvanized coating. TrusSteel's galvanization protection far exceeds the industry standard G-60 coating.

Allowable Shear Loads per Double-Shear Fastener
LBS (kN)

Tube Web Thickness	Chord Thickness in Mils (GA)					
Mils (GA)	28 (22)	33 (20)	43 (18)	54 (16)	68 (14)	97 (12)
33 (20)	700 (3.11)	772 (3.43)	878 (3.91)	995 (4.43)	995 (4.43)	995 (4.43)
47 (18)	779 (3.47)	977 (4.35)	1263 (5.62)	1348 (5.60)	1348 (5.60)	1348 (5.60)
63 (16)	779 (3.47)	977 (4.35)	1263 (5.62)	1348 (5.60)	1348 (5.60)	1348 (5.60)

Notes

1. Based upon the material thicknesses of TrusSteel members.
2. Double-Shear fasteners include 14AMDB1.25, 14AMDR1.5, 14AMDB2.125, 14AMDR2.375.
3. Fastener values were determined by tests following guidelines set forth in Chapter F of the 2007 edition of the North American Specification for the Design of Cold-Formed Steel Structural Members

TrusSteel System

Additional Info

Refer to the TrusSteel Standard Details for additional information regarding the physical and structural properties of TrusSteel components. These Details are considered an adjunct to this manual and they are available in CAD formats from www.TrusSteel.com and are also on the electronic version of this manual.

Product Identification

For easy identification, each chord is stenciled with the following chord information (example shown in parenthesis - see photo):

- Designation (43TSC4.00)
- ICC-ES Legacy Report (NER 529)
- Size (2.5 x 4.00)
- Mil thickness (43)
- Yield strength of steel (55 KSI)
- Chord galvanization (G-60)
- UL Recognized Component Mark
- TrusSteel name
- Patent number

Double-Shear™ fasteners have head markings that show the Alpine delta logo (see photo). Heads are color-coded according to size and use in the truss.

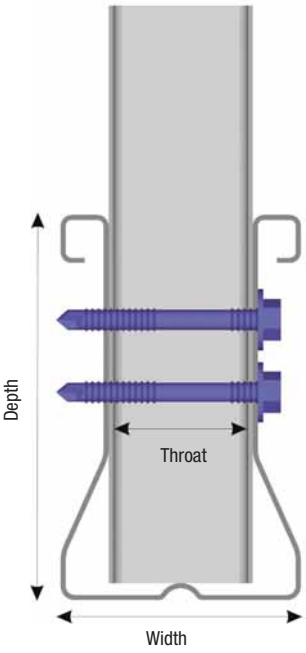

Cross-Section

Taken through TrusSteel chord and web, showing the Double-Shear fasteners.

TrusSteel chord markings

As shown in a typical bundle of TSC4.00 chord material.

TrusSteel Member Properties

In inches, unless noted otherwise

Member	Width	Height	Throat	Fy KSI (MPa)	Available Mils (GA)	Galvanization
TSC2.75	1-1/2	2-3/4	3/4	55 (379)	28 (22), 33 (20), 43 (18)	Min. G-60 or equivalent
TSC3.00	2-1/2	3	1-1/2	55 (379)	28 (22), 33 (20) 43 (18), 54 (16)	Min. G-60 or equivalent
TSC4.00	2-1/2	4	1-1/2	55 (379)	28 (22), 33 (20), 43 (18), 54 (16)	Min. G-60 or equivalent
				50 (350)	68 (14), 97 (12)	
Tube Webs	various			45 (310)	33 (20), 47 (18), 63 (16)	Min. G-60 or equivalent
Z-Webs	various			40 (275)	33 (20), 43 (18)	Min. G-60 or equivalent

Wind Loading

Cold-Formed Steel (CFS) trusses have performed well when subjected to high wind situations such as hurricanes, down bursts and tornados. Recent hurricane activity in the United States underscores the strong performance of CFS trusses.

Design Responsibility

It is the responsibility of the building designer to communicate the wind loading requirements to the truss designer. This includes (but may not be limited to) all of the factors described in the Wind Load Factors list shown in this section. The building code utilized by the local jurisdiction will outline the wind loading requirements for a structure either explicitly or by reference. For instance, the International Building Code (IBC), 2009 edition, references that the American Society of Civil Engineers (ASCE) standard ASCE7-05 be used to determine the wind load applied to a structure.

Vertical Loads and Uplift Loads

Trusses resist wind loads, which include any loads applied to trusses by the wind when it encounters a structure. When wind encounters a surface of a structure, it creates a load on that surface which must be resisted and transferred. As wind encounters the roof surface of a building, it creates loads on those surfaces that act perpendicular to the surface and can be in either an inward direction or an outward direction.

Engineers typically call a load acting inward to the roof surface a downward load from wind. A load acting outward to the roof surface is called an uplift load. The directions of these loads are dependent on geometric factors associated with the building. The magnitudes of these loads are dependent on many factors, including wind speed, wind direction, site geometry, site location, building geometry and building type.

Since wind loads act in a direction that is perpendicular to the roof surfaces, a sloped roof surface will have a component of this load that acts in a vertical direction and a component of this load that acts in a horizontal direction. Supporting trusses resist vertical loads, which they eventually transmit down to the building components that support the trusses (walls, girders, etc.). Supporting trusses must also resist uplift loads transmitted from the roof surface. These uplift loads produce uplift reactions at the truss supports that must be resisted.

Lateral Loads

Since roof structures are typically framed entirely with trusses, it is necessary for trusses to resist the horizontal component of a wind load, often called a lateral load.

A truss can resist a lateral load if the truss is attached directly to its supports in a manner that is adequate to transfer this load into the truss support. To do this, the truss support itself must be designed to receive and resist this load and ultimately transfer it down to the building foundation. If the truss-to-support connection does not resist this load adequately, a truss can slide off its supports when a horizontal load is applied.

Another way to resist a horizontal load, which is more common in modern building design, is to transmit the load through a diaphragm. Diaphragms are built of structural sheathing that is directly applied to the truss top and/or bottom chords. Common types of structural sheathing are corrugated metal deck (e.g. B-deck) or wood structural panels (e.g. plywood). A diaphragm acts like a beam in that it takes the horizontal load component applied to many trusses and transfers it out to building elements that are able to resist this accumulated horizontal load.

A truss that is used to transfer a diaphragm load down to a resisting shear wall is commonly referred to as a “drag truss” as it “drags” the lateral load from the diaphragm to the shear wall. If the building designer intends a truss to be used as a drag truss to transfer lateral loads, it is important that the loads be determined by the building designer and transmitted to the truss designer.

Stress Reversal

It is important to design a structure and its elements to resist loads for winds coming from all directions. When subjected to wind loads, the internal members of a truss can experience a stress reversal. A stress reversal occurs when a member is subjected to a force that is in the opposite direction as another stress from a different type of load.

Wind Loading

The IBC no longer permits the increase factor for a load case of solely dead plus wind (or seismic) load.

For example, when designing a single truss, a gravity load is a downward-acting load while a wind load is typically an uplift or upward-acting load. It is extremely important that each truss be analyzed for a stress reversal situation, so that each truss is designed to support every kind of load that it may encounter.

Attachment to Supports

A wide variety of TrusSteel connection hardware, with associated application details, is available for anchoring trusses to the supporting structure. These rated hardware connectors can be installed to resist wind (uplift) loads, in-plane lateral loads and out-of-plane lateral loads - in any combination of these loads. It is imperative that the building designer clearly define the loads that a truss, and the truss connections, must resist.

Demise of the Allowable Stress Increase

As a result of recent developments in the standards associated with the design of CFS members, designers are no longer able to increase allowable stresses by 1/3 when the loads are from wind or seismic events. In the past, it was common practice to allow such increases. This practice was supported by design professionals, design specifications, loading standards, and building codes for a century and had deep roots in the design community. This increase was allowed for seismic loads because these loads were not considered until recently. The rationale for the increase was that seismic loads were intermittent and of short duration.

Research since that time has shown that steel strength does not increase with load durations typical of wind and seismic events, has improved our accuracy in determining wind and seismic design loads, and has resulted in changes in design loads to account for the intermittent nature and variability of such loads. One such change permits a 25% reduction in live load when two or more types of live load exist, provided the 1/3 stress increase is not also taken. This 25% reduction in load is identical to a 1/3 increase in allowable stress, insofar as 3/4 is the inverse of 4/3, and has been confused as being equal to the existing 1.33 increase factor. However, this 25% reduction cannot be applied to a load case consisting solely of dead plus wind loads, which may govern the design of roof trusses in high wind regions. For this reason, the loss of the 1/3 stress increase factor may increase the amount of steel in a member by as much as 1/3. While such an increase is extreme and not typical, it is likely that trusses in high wind regions will show some greater material thicknesses (gauges) of component sections on occasion due to the removal of this factor.

The above change was first published in the 1970s and used by some designers instead of the old 1/3 stress increase factor, but the old factor remained available (and in use) until recently. The IBC no longer permits the increase factor for a load case of solely dead plus wind (or seismic) load.

While it can be difficult to accept building code changes that may cause increases in material costs, this change is needed to assure that CFS continues to show safe and consistent engineering performance under severe loadings like hurricanes and earthquakes.

Wind Loading

Wind Load Factors

Determining the correct wind loads on individual structures can be very complicated, and it is important to have a firm understanding of the way that a structure resists the wind. The following is a partial listing of the factors that may have an influence on the wind loads used for the design of a truss:

- Geographic location of the building (to determine the basic wind speed, see "Basic Wind Speed Map")
- Height above ground
- Exposure category of terrain around the building being designed
- Building use
- Location of truss in building
- Location of building in relation to hills and escarpments
- Building dimensions
- Area of load carried by the truss
- Building porosity (open, closed or partially open)
- Dead load on the trusses to be considered for wind analysis (usually less than the gravity design dead load).

Basic Wind Speed
(Miles Per Hour)

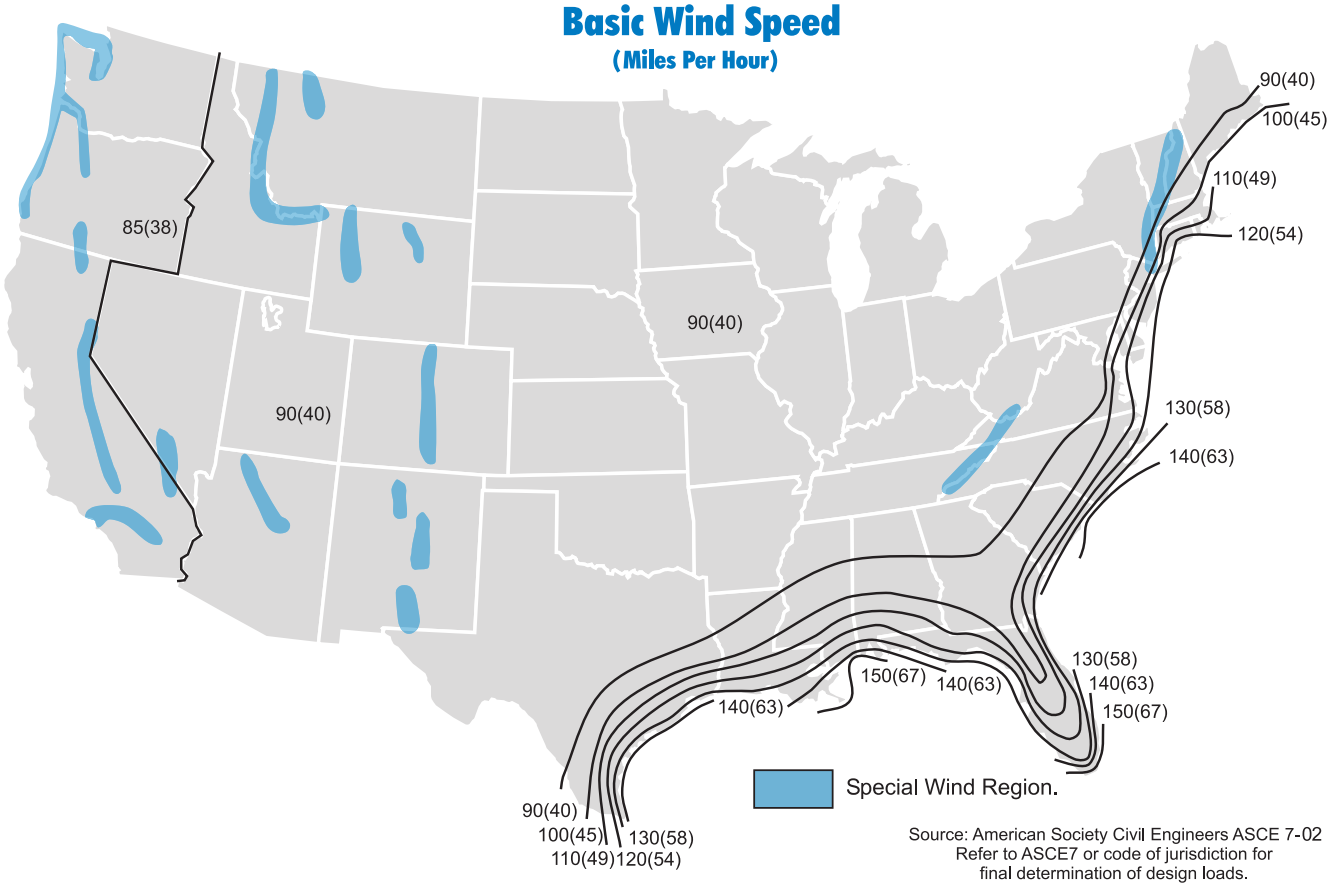

Source: American Society Civil Engineers ASCE 7-02
Refer to ASCE7 or code of jurisdiction for final determination of design loads.

Notes

1. Values are nominal design 3-second gust wind speeds in miles per hour (m/s) at 33 ft. (10m) above ground for Exposure C category.
2. Linear interpolation between wind contours is permitted.
3. Islands and coastal areas outside the last contour shall use the last wind speed contour of the coastal area.
4. Mountainous terrain, gorges, ocean promontories, and special wind regions shall be examined for unusual wind conditions.
5. Regions outside the contiguous 48 states - refer to ASCE 7 or your local building official.

Snow Loading

Design Considerations

An important consideration in the roof design process is the potential for varying types of snow load conditions. Roofs and buildings that include details or parapets and add-ons such as shed roofs or solar panels need to be designed for potential snow accumulation. Roof slope, surface material textures and insulation may also affect the potential for snow and ice accumulation.

The American Society of Civil Engineers (ASCE) publishes *Minimum Design Loads for Buildings and Other Structures* (ASCE7), which contains a detailed procedure for determining snowdrift loads. Regional characteristics such as mountains, flat land and coastal and inland areas can affect annual snowfall. Refer to the *Ground Snow Load Map*, as published by ASCE.

The diagrams shown below are used to illustrate some of the situations that may be encountered when designing a roof system. Actual design procedure as outlined in the applicable code must be consulted when designing for snow.

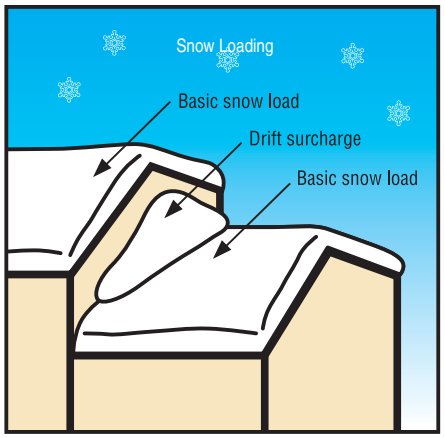

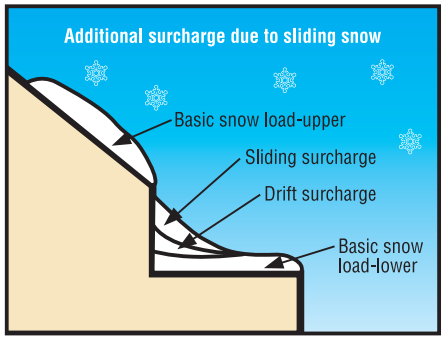

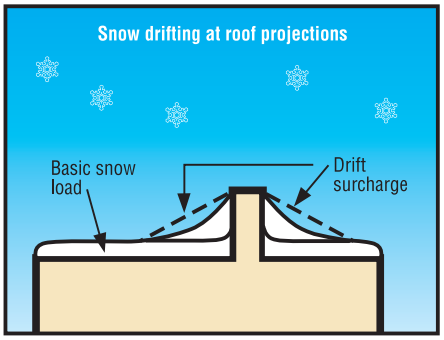

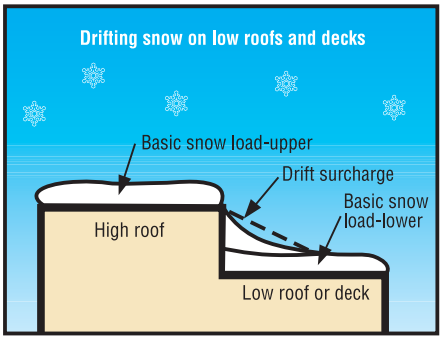

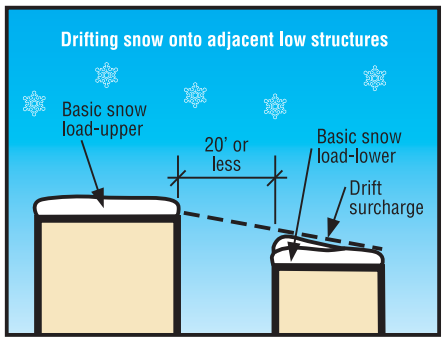

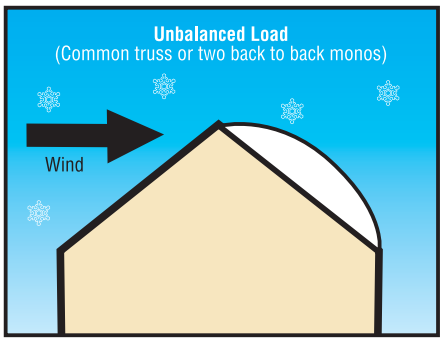

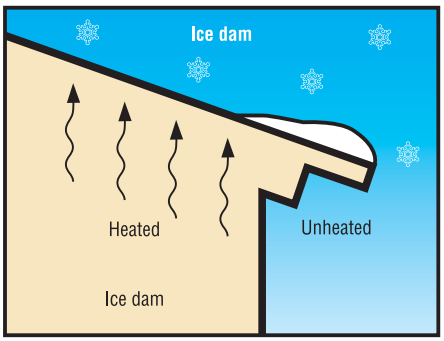

Seismic Loading

Seismic Events

Over sixty percent of the land area of the USA is considered seismically active. Certain regions of the country are more prone to heavy seismic activity than other areas, examples being California, Alaska and Hawaii. Structures in these regions are required to be designed for specific lateral loads imposed through seismic activity.

In a seismic event, slippage in the earth's crust releases energy that is transmitted along the surface of the earth as a series of waves, similar to the way that waves travel across water when the surface is disturbed. These waves can produce an up-and-down motion, a sideways motion, or both.

The type and severity of the motion depends on the amount of initial energy released, the distance from the epicenter, type of ground fault and soil characteristics. The back-and-forth movement can cause brief accelerations of 1g or higher in strong earthquakes. This ground vibration changes its magnitude throughout the duration of a seismic event. The vibrations usually taper off, or dampen, in a few seconds, although the waves can continue for several minutes. Aftershocks are earthquakes of lesser magnitude than the main earthquake. They may occur for hours or days after the main earthquake and originate near the initial epicenter.

Seismic Design Categories

The International Building Code assigns a Seismic Design Category to each location in the USA based on earthquake probability, occupancy, and soil characteristics. Categories A and B are assigned to locations that do not require any seismic design. Structures built in Category C locations require some special detailing, but one and two family dwellings are exempt from the seismic provisions. Categories D1, D2, and E require successively more load resistance and attention to prescriptive details.

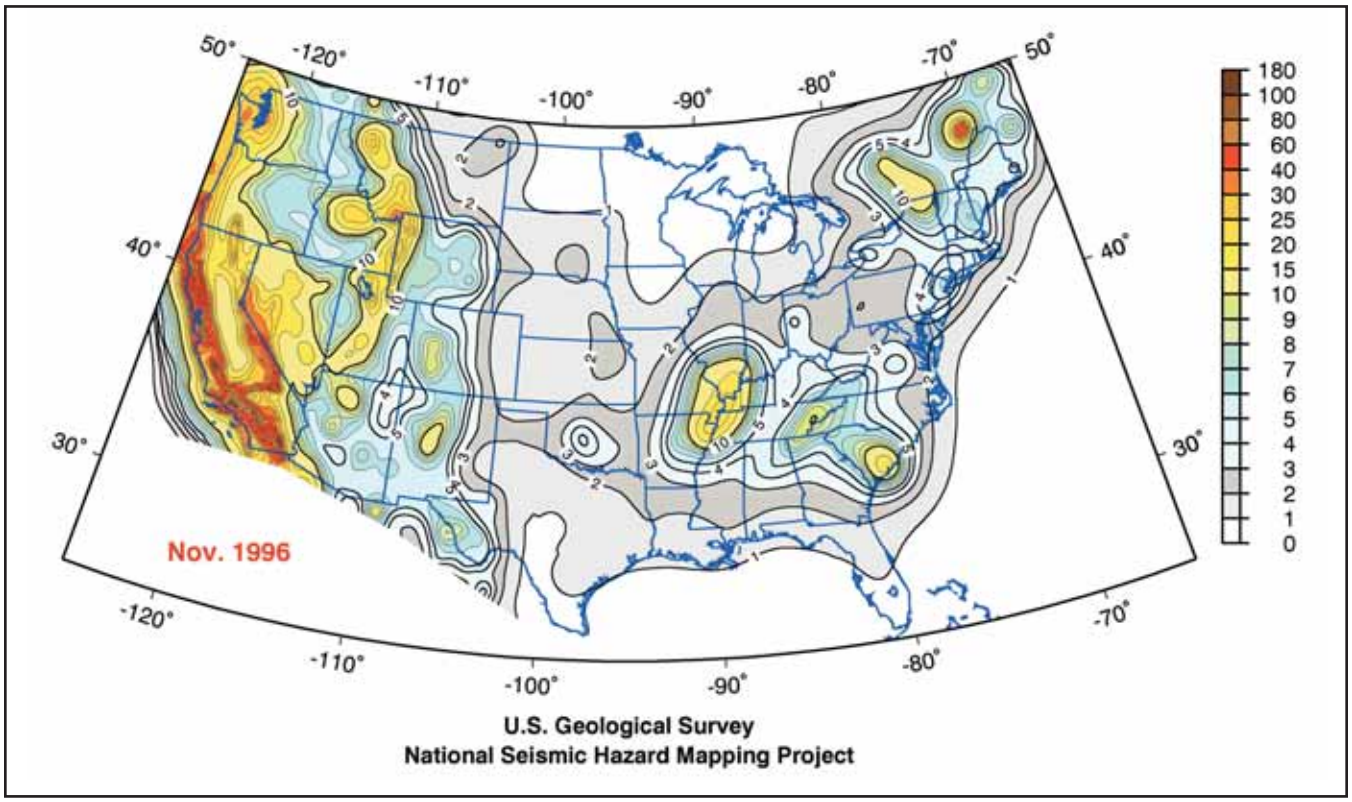

Map shown for illustration purposes only. See the IBC or ASCE7 for actual seismic loading maps and data.

Seismic Loading

Diaphragms

In most instances when buildings with trusses require seismic or wind analysis, the lateral forces on the building are resisted by a system of diaphragms. Roofs and floor planes covered with wood sheathing (plywood or OSB) or metal decks can be designed to create "horizontal" diaphragms that can resist lateral loads. Vertical members such as exterior walls and interior shear walls are connected to the horizontal diaphragms and to the building foundation to tie the entire structure together. Specific trusses may be designed to be located directly over the shear walls to transfer the horizontal load from a portion of the roof to the shear wall. These trusses are called "collectors," or "drag trusses," because they collect the forces from the diaphragms and transmit them to the shear walls. Determination of the required location, loading and connections for these drag trusses is the responsibility of the building design professional.

The model codes publish tables of shear values for plywood panel systems and the metal deck manufacturers publish their own proprietary values. Typically, shear panel systems designed using the code tables specify nail or screw patterns for the perimeter of the diaphragm and for the interior edges of the individual structural panels within the diaphragm.

CFS Trusses and Seismic Resistance

Buildings in earthquake-prone regions should be designed to protect occupants during a reasonably probable seismic event. Damaging earthquakes have large motions but are usually short in duration, lasting only a few seconds. This is fortunate because the longer an earthquake lasts the more damage it can cause. All types of structural members and connections can fail during long load cycles, as material fatigue occurs or connections slip apart.

CFS (Cold-Formed Steel) trusses are well suited for use in seismic applications. They are light in weight so the forces are low. They are quite stiff for their weight, so lateral displacements are minimized. They are also ductile which means that trussed systems are more likely to deform under overload than to fail suddenly.

In some structures trusses must be designed to resist horizontal loads generated by the sideways acceleration of their own mass during an earthquake. This requirement is usually ignored because the connections designed for gravity loads and wind uplift loads are judged sufficient to withstand any lateral loads that might occur. If the roofing materials assembly is sufficiently heavy and the seismic event severe enough the building designer may require the inclusion of additional loads during analysis or the use of special connections.

Another common horizontal load on trusses occurs when wind or seismic motion are imposed perpendicular to a wall that supports the trusses. In this case a concentration of load is induced into the heel of the truss that must be transferred up to the roof diaphragm. This is the opposite of a drag truss load, where the load along the roof must be transferred to the wall below. In either case the connections between the horizontal diaphragm and the vertical support are critical to the safe design of the structure.

Sound Control

Unwanted Sound

The transmission of unwanted sound, classified as noise, is one of the most common complaints made by the occupants of modern buildings. This problem has grown in recent years as material suppliers have developed products and construction methods to reduce the weight of building components. The goal has been to conserve material and reduce both component cost and construction time. Unfortunately, the goals of lighter weight building materials and the containment of noise often come into direct conflict.

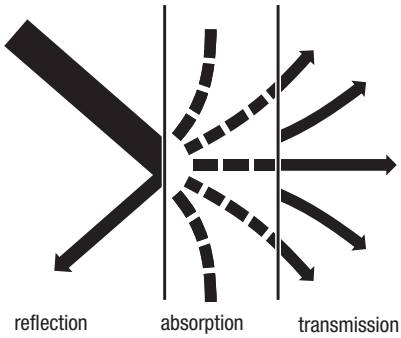

Methods of Sound Propagation

The Mass Law

The amount of sound, or vibration, which is transmitted through floors, walls and ceilings is governed by the Mass Law, a theoretical rule that relates the mass per unit area to the control of airborne sound. The Mass Law equation estimates that each time the frequency of measurement or the mass per unit area of a single layer is doubled, the sound transmission loss (STL) is increased by about 6 decibels (dB). A 6 dB reduction in sound provides roughly a 25% reduction of the original sound level, contingent upon other factors such as temperature and the frequency (Hz) of the sound. In construction terms, a 4 inch thick concrete floor has a sound transmission loss (STL) of 42 dB at 250 Hz. Doubling the floor thickness to 8 inches only increases the STL to 48 dB. This doubling in thickness (and mass) provides only the 25% reduction in transmission loss described above. This is not an acceptable solution in today's construction market.

Sound Control

The subject of sound transmission is situation, or construction project, specific. The source of the sound or noise may be airborne, or structure-borne, or a combination of both. Typically the elimination of airborne noise requires a reduction in the energy level of the sound waves, which are created by fluctuations in atmospheric pressure reaching the eardrum. Structure-borne noise is created by unwanted vibrations. The designer should select, from the outset, the system and products that will deliver the appropriate results. It is normally far more economical to integrate the solution into the initial design than to attempt to create an "add-on" solution during the construction phase.

There are a number of companies specializing in the engineering of noise control systems. Because increasing mass is no longer the solution of choice, these companies design systems and products that create an interruption in the noise path or create a containment barrier (at the source) to prevent the noise from reaching the receiver. These companies use four basic tools to combat noise transmission: absorption, barriers, damping and vibration isolation. A number of products, from decking and fabric barriers to mechanical devices, are used to address specific transmission loss needs.

Resources

In general, many sound control design methods, products and applications that work with other framing systems can work with CFS framing. Some of these products have been tested in CFS applications and the product manufacturers have published data on these applications. The building designer who is striving for a particular sound control solution should carefully examine the manufacturer's published data as well as data published by independent researchers.

Here is a small sampling from the wide range of valuable informational sources on sound control:

Steel Framing Alliance (SFA)
www.steelframingalliance.com
Residential Steel Framing – Builder's Guide to Fire and Acoustical Details, prepared for The U.S. Department of Housing and Urban Development (HUD) and the Steel Framing Alliance by the National Association of Home Builders (NAHB) Research Center, Inc (2004).

North American Insulation Manufacturers Association (NAIMA)
www.naima.org

Noise Is Measured in Decibels (dB)

Whispers: about 20 dB
Normal conversations: about 60 dB
City traffic: about 80 dB
Lawn mower/leaf blower: about 103 dB

Repeated exposure to sounds over 85 decibels is considered dangerous to hearing, and the louder the noise, the less time it takes to damage hearing.

Sustainability & LEED

The U. S. Green Building Council

The U. S. Green Building Council (USGBC) defines itself as "the nation's foremost coalition of leaders from across the building industry working to promote buildings that are environmentally responsible, profitable and healthy places to live and work." Council-sponsored consensus committees have developed the Leadership in Energy and Environmental Design (LEED) Green Building Rating System in order to accelerate the development and implementation of green building practices. TrusSteel is proud to be a member and supporter of the U.S. Green Building Council.

LEED Standards

Currently, LEED-NC (New Construction) is a goal-oriented standard whereby point-based goals are set for specific areas of building design, with point awards based upon green-oriented criteria such as reduced site disturbance, increased energy performance, resource reuse, use of materials local to the site and the specific recycled content of building materials. Sections 4.1 and 4.2 (Recycled Content) of the LEED-NC Checklist (Materials and Resources section) allow the award of one point each for overall building materials totals which exceed 5% (one point) and 10% (one point) recycled content (based on post-consumer + 1/2 post-industrial content). Since local TrusSteel Authorized Fabricators build TrusSteel trusses, attribution toward further LEED points may be obtained when TrusSteel trusses are obtained from an Authorized Fabricator that is considered local to the project. Project checklists of the available LEED points are available from the USGBC.

Recycled Content

TrusSteel trusses are made with 100% U.S. Prime steel. This steel is not only 100% recyclable, it is composed of steel that is nearly all recycled. According to the Steel Recycling Institute, "steel used in structural steel building products, whether produced via the EAF (electric arc furnace) method or the BOF (blast oxygen furnace) method can be used in the LEED calculations to exceed both 5% and 10% goals." Further information on the LEED calculation may be obtained from the USGBC and from the Steel Recycling Institute publication, *Steel Takes LEED with Recycled Content*.

Information Resources

Here are Web sites where you can learn more about the USGBC, calculating LEED percentages and steel recycling:

U.S. Green Building Council (creators of the LEED standards)
www.usgbc.org

Steel Recycling Institute
www.recycle-steel.org

American Institute of Steel Construction (AISC)
www.aisc.org

Fire Resistance & UL

TrusSteel components bear the UL Recognized Component mark.

TrusSteel and UL

Building codes often have requirements that building elements perform for a specific period of time when subjected to the elevated temperatures associated with a fire event, based upon the defined type of building/occupancy. One of these requirements is that the building element must withstand a fire event while supporting a specific load. One method of documenting this performance is by testing at Underwriters Laboratories, Inc. (UL). UL has the ability to perform fire tests on building elements and assemblies according to standards published by the American Society of Testing and Materials (ASTM). Building elements and assemblies that pass this testing qualify as Listed UL assemblies.

Building assemblies containing TrusSteel trusses have been tested at UL, and these assemblies have been Listed as having 1 hour, 1-1/2 hour and 2 hour fire resistive properties as described and when utilized as described in the UL reports listed in this Guide. TrusSteel has earned the UL Classification Mark as to its fire-resistive properties. This mark appears on TrusSteel members for easy identification.

Insurance rating bureaus and many Federal, state, county and municipal authorities and inspectors recognize UL listings. The building designer is responsible for determining the suitability of use for UL Listed assemblies in specific building designs.

Online Updates

Underwriters Laboratories (UL) Listed Fire Resistive Designs with TrusSteel trusses have proven to be key documents in gaining the confidence and specifications of architects, engineers and end users. TrusSteel Listed Fire Rated Assemblies have also proven to be living documents, undergoing frequent updates as TrusSteel, along with our partner companies in these listings, continues to expand the Listings to include different materials and material configurations. For this reason, we do not provide a printed copy of these Listings but rather encourage designers to visit the UL Web site and view or download the most current Listings. To find these Listings, point your browser to http://www.ul.com and search on the Design Numbers listed in this Guide, or perform a keyword search for "TrusSteel" under the Certifications section of the website.

UL Listings Assemblies

TrusSteel products qualify for hourly ratings as shown below.

UL Design #	Assembly	Hourly Rating	Gypsum Board Assembly
P515 (Pitched Roof)	R,U	1	Double layer of 5/8" Type C
P525 (Pitched Roof)	R	1, 1-1/2, 2	Single layer of 5/8" Type C
P525 (Pitched Roof)	U	1, 1-1/2	Single layer of 5/8" Type C
P525 (Pitched Roof)	U	2	Double layer of 5/8" Type C
P256 (Pitched Roof)	R,U	1	Single layer of 5/8" Type C (I.C.)
P526 (Pitched Roof)	R,U	1-1/2	Double layer of 5/8" Type C (I.C.)
P540 (Pitched Roof)	R,U	1	Single layer of 5/8" Type FSK-C or FSW-C or FSW-G (I.C.)
L551 (Flat Truss/Floor)	U	1	Single layer of 5/8" Type C (I.C.)
L565 (Flat Truss/Floor)	U	1	Single layer of 5/8" Type FSK-C or FSW-C or FSW-G (I.C.)
G542 (Flat Truss/Floor)	R,U	1	Single layer of 5/8" Type C (I.C.)
G542 (Flat Truss/Floor)	R,U	2	Double layer of 5/8" Type C (I.C.)

R = Restrained, U = Unrestrained, I.C. = Insulated Cavity

Trusses as Building Components

Fink

Howe

Double Fink

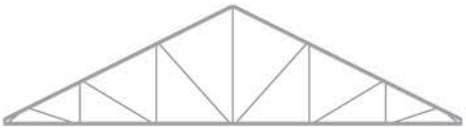

Double Howe

Double Fink Scissor

Howe Scissor

Room-in-Attic

Hip Girder

Flat Truss
(Warren pattern)

Sloping Top Chord
(Howe pattern)

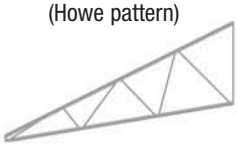

Scissor mono

Mono

Efficient Components

Trusses are versatile and efficient framing components. They are available in an almost infinite combination of profiles, depths, and internal web patterns, depending upon the required building geometry and loads. The great efficiency of trusses comes as the result of the custom-design of almost every truss for its particular location and application.

Truss Profiles

Truss profiles are usually the result of the need to create specific roof planes and perimeter conditions. Truss depths are usually driven by roof planes and heel heights, but are also driven by the need to create strength.

Truss Web Patterns

Truss web patterns are generated by the truss designer to create the most efficient truss. Web patterns are often tailored to allow more efficient truss bracing. Patterns can also be tailored to create clear paths (runs or chases) through the web pattern to allow the passage of ductwork. The creation of these runs can speed the installation of mechanical systems.

Available Combinations

The trusses in these charts represent a fraction of the possible combinations of truss span, load, profile and depth. If you have a specific truss configuration and you need load/span information, please contact your local Authorized TrusSteel Fabricator. You can find a list of these Fabricators on www.TrusSteel.com.

Roof Truss Systems – Framing Styles

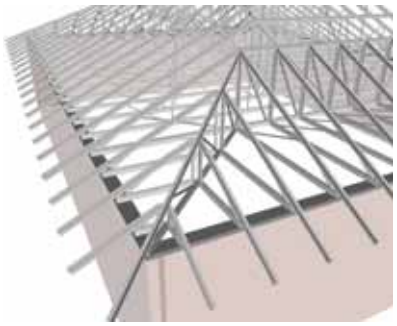

Introduction

Framing with trusses gives the building designer the versatility to accomplish a multitude of interior and exterior building geometries while allowing the inside of the building to be free of any supports. Within any roof style there are many truss framing methods or systems. These systems can vary based on framing material (steel or wood), the experience of the designer, and even vary from region to region. However trusses are designed and regardless of the roof style, the challenge is to create a truss system that is efficient both to fabricate and to install. A few of the more common framing systems for steel trusses are described below. Please note that the names given to specific trusses, truss conditions and framing systems can vary from region to region. Ceiling lines may be flat or sloped. Sloped ceilings have some limitations, so please consult the truss designer.

Hip Systems

A hip roof framing system allows a roof area to have a sloping roof plane rising from every wall segment. This system uses smaller trusses (jack trusses) that are placed at 90 degrees to the front wall (see illustration). A truss (hip jack) runs directly underneath the hip ridge line and spans at an angle different from the other trusses. Hip jack trusses are supported by a larger truss (sometimes called the #1 hip truss) that spans the width of the building and is located a short distance (setback distance) from the front wall. For best efficiency of the stepdown hip system, a good rule of thumb is to keep the setback distance to less than 10 feet. A hip system offers the benefits of clear span with an eave or fascia line maintained at the same elevation around the building. The end slope may be equal to or different from the side slope.

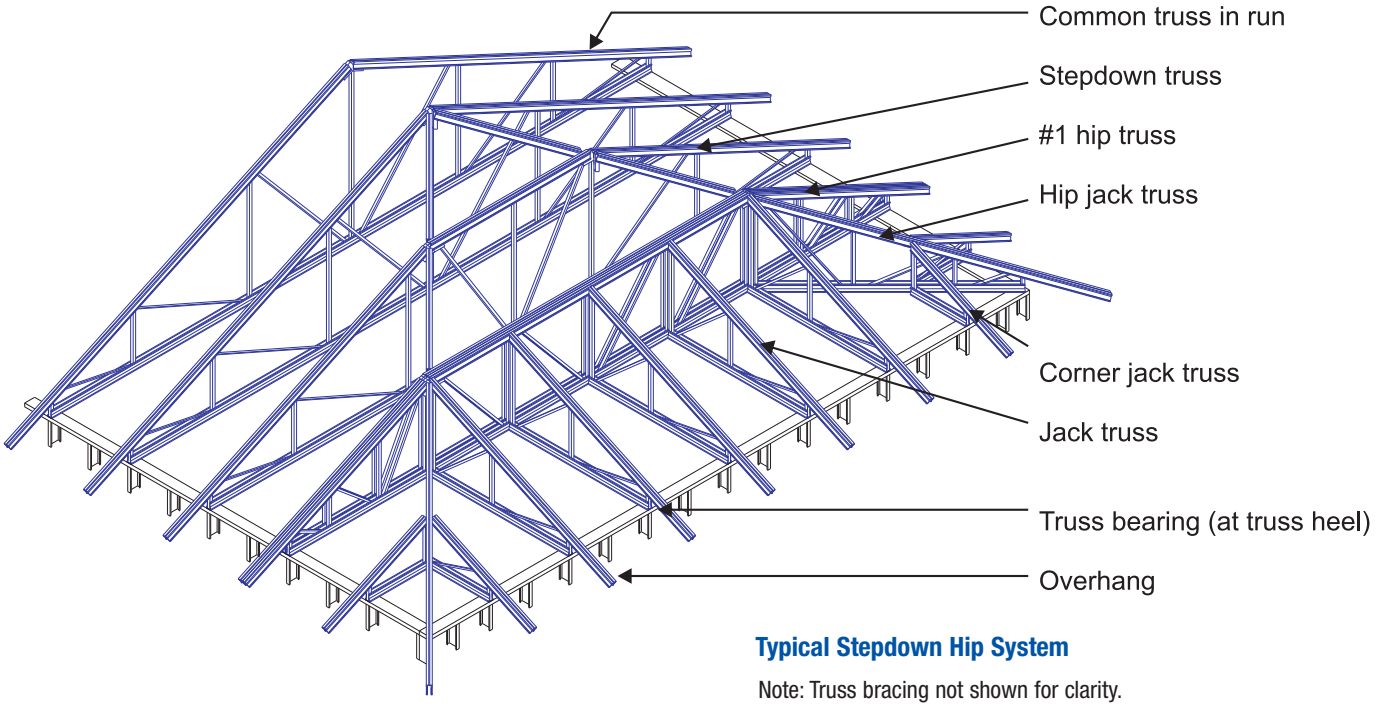

Typical Stepdown Hip System

Note: Truss bracing not shown for clarity.

Roof Truss Systems – Framing Styles

Gable and Valley Systems

Gable System

A gabled roof system allows a framed area to have a vertical plane coming off an end wall. This framing system gives the appearance that the vertical plane of the end wall extends up to the roof plane. The trusses in this system span the width of the roof area and can be of the same profile throughout the length of the building provided other interior or exterior geometry changes do not occur. The first truss is located on the end wall and is called the gable end truss. The gable end truss, unlike the other trusses in this system, is typically supported continuously by the end wall for vertical loads, and resists the horizontal wind load and transfers that load to the building diaphragm. Because of its unique role, the gable end truss may have a different web pattern and may require different types of bracing than the common trusses. A gable end truss will typically have vertical webs spaced at 16" or (no more than) 24" on center, to resist lateral wind loads and to accommodate the attachment of sheathing. Gable end truss vertical webs, when sheathed, will act like wall studs.

Valley System

Valley trusses are generally supported by the clear-span trusses below to form new, intersecting ridge lines. Valley trusses can be attached directly to the top chord of the supporting trusses below or directly to the roof decking (see photo).

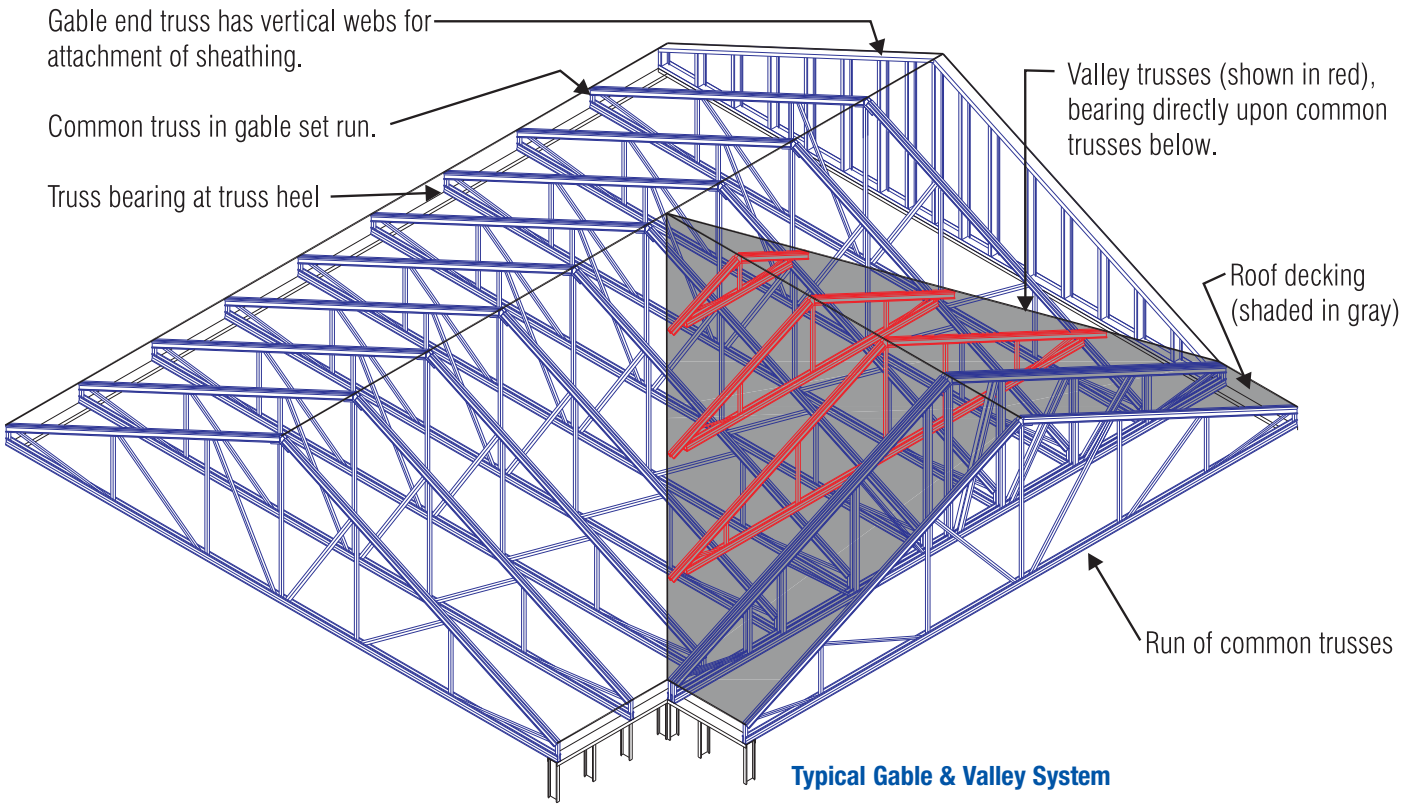

Typical Gable & Valley System

Note: Truss bracing not shown for clarity.

Roof Truss Systems – Piggybacks

Cap truss installed on top of base truss. Note continuous bracing on top chord of base truss and connection clip.

Applications

There are instances when a roof truss application, due to a combination of roof pitch and truss span, will require trusses that would be too tall to build, deliver or handle economically. In such instances, two or more trusses can be built and delivered which will, when installed together, do the work of each single, oversized truss. Of these two trusses, the bottom component is called the base truss and the truss that rides on top is called the piggyback or cap truss (see illustration). As a rule of thumb, individual trusses that would be over ten to twelve feet tall would probably be candidates for a piggyback system.

Installation Sequence

During installation, piggyback system base trusses are installed first and proper bracing is installed for the base truss set. Base trusses must be installed to resist the uplift forces of the entire piggyback system. Bracing of the top chords of the base trusses is essential and is often accomplished using roof decking/ sheathing or continuous purlins. This bracing must be completed prior to the installation of the cap trusses.

Cap trusses are then attached to the base trusses in a proper manner to resist lateral and uplift forces. Connections of the cap trusses to the base truss set are sometimes made using proprietary connectors (see Section 5). Decks or purlins for the roof membrane system may then be applied to the cap trusses.

During design and estimation, designers and contractors will want to account for these additional materials as well as for the fasteners required to install decking, purlins, clips, etc. Additional labor may be required to install these materials and the piggyback trusses.

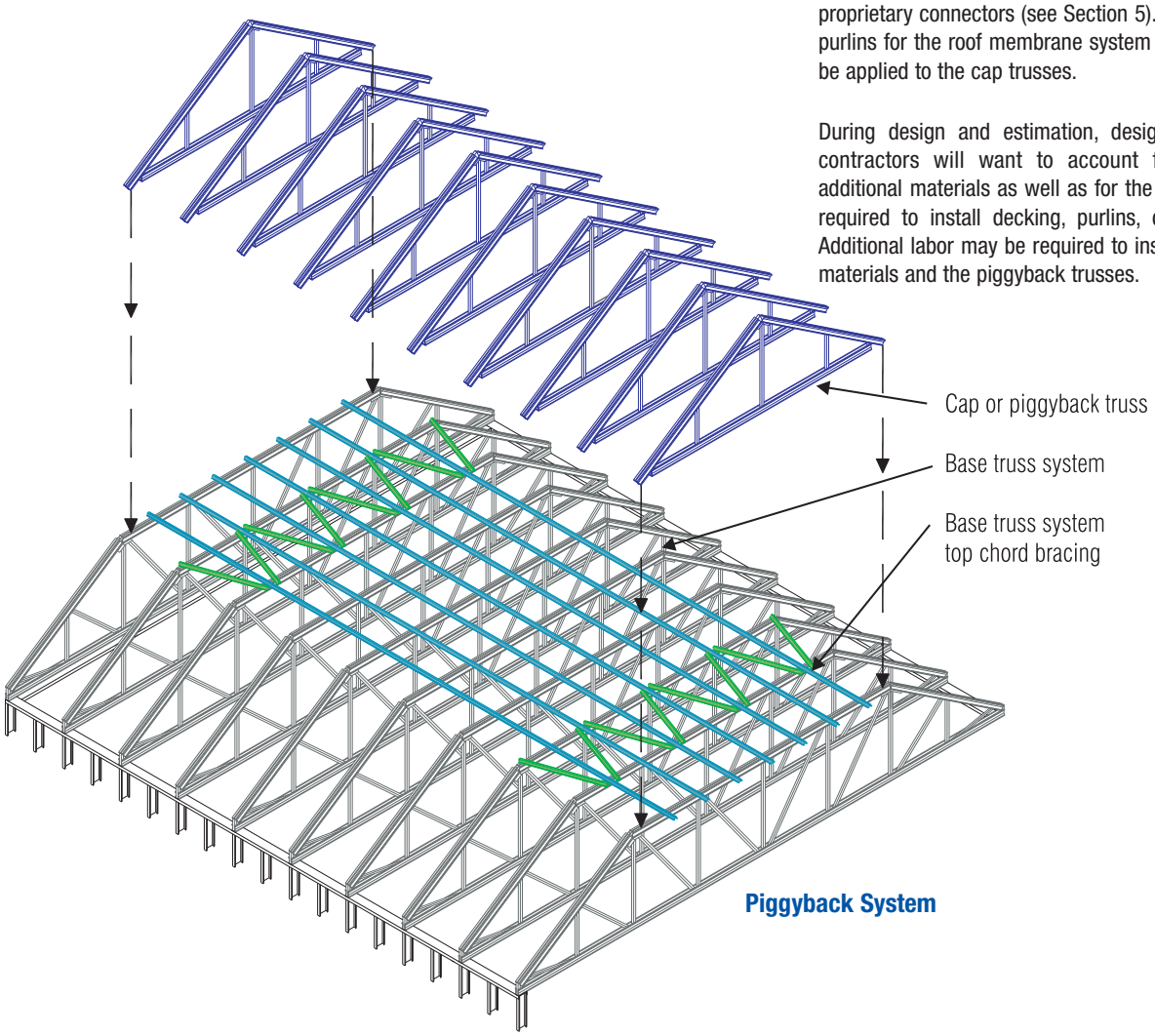

Piggyback System

Roof Truss Systems – Piggybacks

Standard Details

Several TrusSteel Standard Details are available to assist the designer in understanding and detailing piggyback systems. These Details may be downloaded from www.TrusSteel.com or from the electronic version of this manual. Detail TS003A is shown below as an example.

Rafting

Piggyback truss systems, when properly designed and braced, can be candidates for the installation technique known as rafting. See Section 7 of this manual for more information on rafting.

Required Information

The Truss Designer will need the following information about the roof system before designing the piggyback system:

- all roof conditions that could require trusses whose height will exceed the maximum allowable truss height (candidates for piggybacking)
- type of continuous framing / support to be used on top of the base trusses (roof decking/sheathing or continuous purlins)
- type of clip to be used to attach the piggyback trusses to the base trusses or to the roof decking/sheathing.

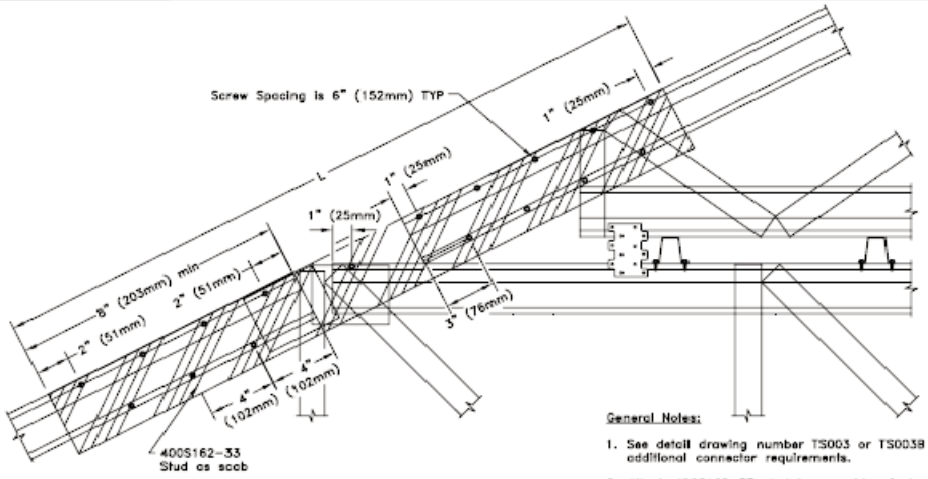

Length for 400S162-33 Scab		
Pitch	TSC2.75 Piggyback (L) Design In. (mm)	TSC4.00 Piggyback (L) Design In. (mm)
3/12 (14.04°)	36 (914)	48 (1219)
4/12 (18.43°)	35 (889)	46 (1168)
5/12 (22.62°)	34 (864)	43 (1092)
6/12 (26.56°)	32 (813)	40 (1016)
7/12 (30.26°)	30 (762)	37 (940)
8/12 (33.69°)	28 (711)	34 (864)
9/12 (36.87°)	26 (660)	31 (787)
10/12 (39.81°)	23 (584)	28 (711)
11/12 (42.51°)	21 (533)	24 (610)
12/12 (45.00°)	18 (457)	21 (533)

General Notes:

1. See detail drawing number TS003 or TS003B and truss design drawing for additional connector requirements.
2. Attach 400S162-33 stud to one side of chords as shown. See chart for required stud length (L). No punchouts are allowed in this member.
3. See this drawing for stud placement and connection requirements.
4. Connect with #10 self-drilling tapping screws as shown.
5. Maximum allowable top chord gravity load for scab is 75 psf (3.59 kN/m²).
6. Wind load:
   ASCE 7-02, 140 MPH (62m/s), 30' (9144mm) mean height, closed building, Exp C, category III - IV, K_{zt}= 1.0 and minimum 5 psf (0.24 kN/m²) top chord dead load to resist wind.
7. Maximum truss spacing is 4'-0" (1219mm) O.C.
8. Piggyback and/or base truss may be either TSC2.75 or TSC4.00 chord material. See truss design drawings for details.
9. Base truss face and piggyback truss face must be on the same vertical plane to use this detail. See section A-A or A-A1 on TS003.
10. End screws are positioned as shown. All other screws are 6" O.C.

TrusSteel
An ITW Company
www.TrusSteel.com
Florida: 1950 Marley Drive / Haines City, FL 33844 / (800) 755-8001
Missouri: 13389 Lakefront Drive / Earth City, MO 63045 / (800) 325-4102
California: 8261 Rovana Circle / Sacramento, CA 95828 / (800) 877-3678

Roof Deck Support On Piggyback Overhangs

ITW Building Components Group, Inc. shall not be responsible for any performance failure in a connection due to a deviation from this detail. Any variation from this detail shall be approved in advance by ITW Building Components Group, Inc.

Standard Detail:
TS003A
Date:
02/08/08
TrusSteel Detail Category:
Piggybacks

Roof Truss Systems – Overhangs & Cantilevers

Common Heel Conditions

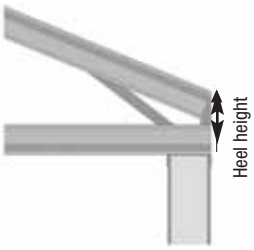

Standard Heel

Standard Heel with Overhang

Standard Heel with Boxed Return

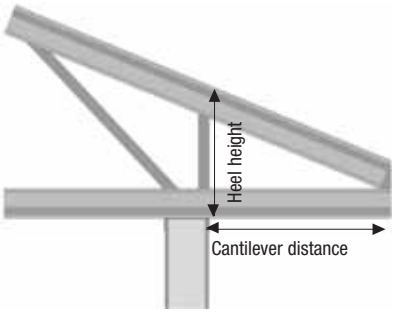

Cantilevered Heel

Truss Heels

The end of a truss is also known as the heel of a truss. All trusses have two heels, one at each end. The heel height of a truss is the distance from the top edge of the top chord to the bottom edge of the bottom chord at the heel (see illustration).

Minimum Heel Heights for TrusSteel Trusses

Due to the internal configuration of heels for non-parallel chord trusses, these trusses have a minimum heel height (see table below). TrusSteel trusses can be fabricated with lower-than-minimum heel heights. Using greater than minimum heel heights can help create more efficient trusses.

Minimum Heel Height Table

Heel height in inches

Roof Slope	Chord Size TSC2.75	TSC4.00
2	5-9/16	8-1/16
3	5-5/8	8-1/8
4	5-11/16	8-1/4
5	5-3/4	8-3/8
6	5-7/8	8-1/2
7	5-15/16	8-11/16
8	6-1/16	8-13/16
9	6-3/16	9
10	6-3/8	9-1/4
11	6-1/2	9-7/16
12	6-11/16	9-11/16

Overhangs and Cantilevers

Most designers who place pitched roofs on buildings design those roofs with perimeter overhangs. Overhangs can be accomplished with trusses by extending the top chords of trusses (overhangs), or by cantilevering the ends of the trusses out past the perimeter bearing support (see illustration). Cantilevered trusses are generally more efficient trusses than those with overhangs, and can simplify the installation of fascia and soffit materials. A cantilevered truss can also have a top chord overhang.

Roof Truss Systems – Sample Spans

		Load 1 20, 10, 10 psf 90 mph wind				Load 2 30, 10, 10 psf 90 mph wind				Load 3 20, 10, 10 psf 140 mph wind				Load 4 30, 10, 10 psf 140 mph wind			
	Chord Size	TSC2.75		TSC4.00		TSC2.75		TSC4.00		TSC2.75		TSC4.00		TSC2.75		TSC4.00	
	O.C. Truss Spans	2'	4'	2'	4'	2'	4'	2'	4'	2'	4'	2'	4'	2'	4'	2'	4'
Common	Pitch																
	3/12	48	26	80+	62	38	20	80+	52	48	26	80+	62	38	20	80+	52
	4/12	56	31	80+	77	45	23	80+	60	56	31	80+	77	45	23	80+	60
	5/12	62	33	80+	80+	52	27	80+	65	62	33	80+	80+	52	27	80+	65
	6/12	64	36	80+	80+	55	27	80+	75	64	33	80+	80+	55	27	80+	75
	7/12	64	37	80+	80+	56	28	80+	80+	64	35	80+	80+	56	28	80+	80+
	8/12	64	38	80+	80+	58	30	80+	80+	64	37	80+	80+	58	30	80+	80+
Scissor	Pitch																
	3/12	27	15	57	32	22	13	48	26	27	15	57	32	22	13	48	26
	4/12	34	19	69	43	28	15	65	36	34	19	69	43	28	15	65	36
	5/12	40	22	77	51	33	18	69	42	40	22	77	51	33	18	69	42
	6/12	46	25	79	57	38	20	72	47	46	25	79	57	38	20	72	47
	7/12	50	28	80+	60	44	23	73	53	50	28	80+	60	44	23	73	53
	8/12	53	31	80+	61	49	25	74	55	53	31	80+	61	49	25	74	55
Mono	Pitch																
	3/12	36	25	80+	60	32	21	80+	50	36	25	80+	60	32	21	80+	50
	4/12	34	26	80+	64	32	23	80+	52	34	26	80+	64	32	23	80+	52
	5/12	34	26	80+	64	32	23	80+	52	34	26	80+	64	32	23	80+	52
	6/12	34	26	80+	64	32	23	80+	52	34	26	80+	64	32	23	80+	52
	7/12	34	28	80+	64	33	23	80+	52	34	28	80+	64	33	23	80+	52
	8/12	34	28	80+	64	33	23	80+	52	34	28	80+	64	33	23	80+	52
Flat	Depth																
	12"	22	18	24	20	19	16	24	20	22	18	24	20	19	16	24	20
	18"	30	23	36	28	29	21	33	27	30	23	36	28	29	21	33	27
	24"	39	28	45	35	35	25	42	32	39	28	45	35	35	25	42	32
	36"	49	35	64	46	44	28	59	41	49	35	64	46	44	28	59	41
	48"	58	36	75	55	51	29	70	49	58	36	75	55	51	29	70	49
	60"	65	36	80+	62	57	29	80	55	65	36	80+	62	57	29	80	55
	72"	66	33	80+	68	51	25	80+	61	66	33	80+	68	51	25	80+	61

Sample Tables

Each TrusSteel truss is engineered individually to meet the load, span, spacing and geometry requirements of a specific project. There are literally millions of possible combinations. These tables show a small sample of those combinations, based on the most common design criteria and simple common trusses.

Contact your local TrusSteel Authorized Fabricator to obtain truss designs for your specific project needs.

General Notes:

1) Spans shown in charts are in feet.
2) Loads shown above are outlined as Top Chord Live Load (TCLL), Top Chord Dead Load (TCDL) and Bottom Chord Dead Load (BCDL).
3) Top chords are assumed to be restrained laterally by structural sheathing.
4) Bottom chords are assumed to be restrained laterally at intervals not to exceed 24 inches.
5) Deflection limits: Live Load - L/360, Total Load - L/240
6) Trusses designed in accordance with ASCE7-02 wind and these considerations:
   - Wind speed shown in charts
   - Exposure C
   - Building category II
   - Truss bearing elevation is 8'0"
   - No topographic effect from escarpment or hill taken into consideration.
   - Enclosed building
7) Certain truss span and pitch combinations may require a truss to be "piggybacked" due to shipping restrictions.
8) Trusses in excess of 80'-0" are possible - refer to TrusSteel Technical Bulletin TB991102.
   For additional information regarding large span trusses, contact a TrusSteel Authorized Fabricator.
9) Scissor trusses described in this table are designed with a bottom chord pitch equal to half of the top chord pitch (i.e. a 6/12 top chord pitch scissor truss will have a 3/12 bottom chord pitch). Many other top/bottom chord pitch variations are possible.
10) Designs may include multiple material thicknesses (mils or gauges) for top and bottom chords as determined by the designer using steelVIEW engineering software. Maximum steel thicknesses are 43 mils (18 GA) for the TSC2.75 chord and 54 mils (16 GA) for the TSC4.00 chord in table above.
11) Truss web patterns will be determined by the designer using steelVIEW engineering software.

Floor Truss Systems

TrusSteel floor trusses provide the convenience of open web members.

Configurations

TrusSteel open web floor trusses are fabricated with the same materials used in TrusSteel roof trusses. The obvious advantage of an open web floor truss over conventional joist framing is the ease of equipment installation for the mechanical, electrical and plumbing trades. TrusSteel open web floor trusses may allow greater clear-span capabilities and facilitate a variety of bearing options. Truss depth and on-center spacing will be determined by specific loading and span requirements.

Serviceability

Serviceability parameters are specified by the building designer and then trusses are designed accordingly. In order to ensure a rigid floor system, TrusSteel recommends a minimum live load deflection criteria of L/360; more rigid requirements may be specified. All TrusSteel floor trusses are recommended to be fabricated with a minimum of two patented Double-Shear fasteners at all web-to-chord connections to ensure rotational stability of the web and increase product stiffness.

Girders

Multiple ply girders at stairwells and other openings allow TrusSteel to provide the entire floor framing package. These girders are designed to carry concentrated loads at specific locations and must be installed according to approved shop drawings. Standard connection details are provided with the truss package to ensure proper installation and load transfer.

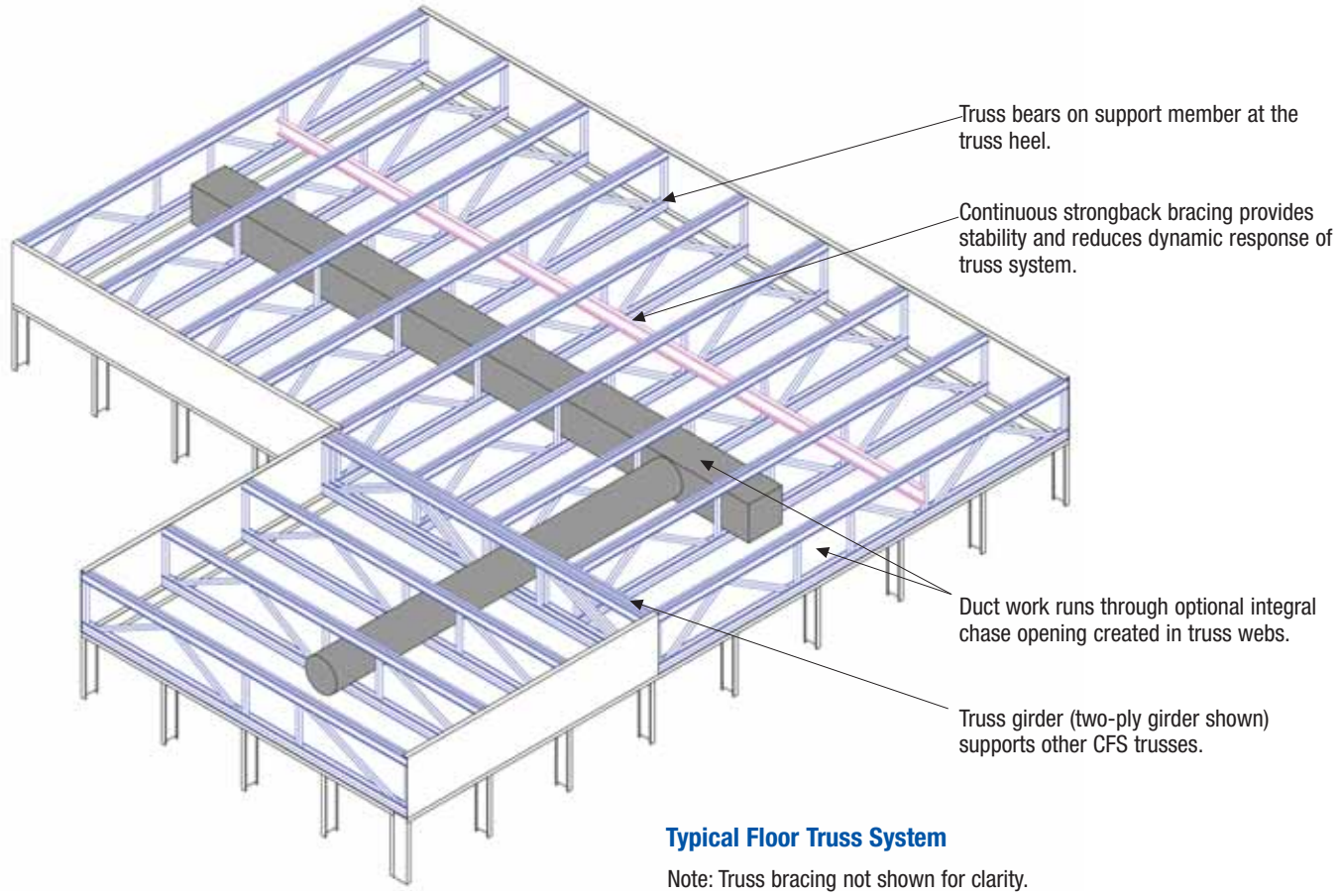

Typical Floor Truss System

Note: Truss bracing not shown for clarity.

Floor Truss Systems

Bearing Options

Multiple bearing options offer the building designer flexibility in assigning bearing elevations and coordinating with other structural systems. While the majority of floor trusses bear directly on the truss bottom chord, top chord bearing can be an option to reduce the overall building height. Mid-height bearing at both exterior and interior beams can eliminate the need for boxed framing and deliver a flat ceiling throughout.

Deck Connections

Whether using a plywood sub-floor in residential framing or metal deck with concrete in commercial construction, deck attachment can be achieved with screws or proprietary ring shank pneumatically installed nails. TrusSteel recommends a minimum steel thickness of 33 mils (20 GA) for the truss top chord in all floor truss applications. The application of acoustical and thermal gasket materials to the top chord can reduce sound and thermal transmission.

Dynamic Response

The dynamic response of a TrusSteel open web truss floor system is greatly reduced by requiring the installation of strongback bridging (generally a 5-1/2" cee stud attached to vertical webs) at a maximum of 10'-0" on-center. This load distribution mechanism converts individual truss components into a rigid floor system. Strongback bridging may be attached to the truss web members with standard single shear screws.

Standard strongback installed on vertical webs.

Strongback splice - overlap one truss as shown.

Floor Truss Systems – Sample Span Tables

Floor Truss Span Tables

The abbreviated span tables shown represent only a small sample of the possible floor truss load/span/depth combinations. Contact your local TrusSteel Authorized Fabricator to discuss your specific truss needs.

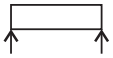

Chord Size	Load 1 40, 10, 5 psf								Load 2 80, 10, 5 psf							
	TSC2.75				TSC4.00				TSC2.75				TSC4.00			
O.C. Truss Spacing	12”	16”	19.2”	24”	12”	16”	19.2”	24”	12”	16”	19.2”	24”	12”	16”	19.2”	24”
Depth																
12”	22	20	18	17	24	24	22	20	17	15	14	13	21	18	18	16
14”	25	22	21	19	28	27	25	23	19	17	16	15	24	21	20	18
16”	28	25	23	21	32	31	28	25	22	19	18	17	27	24	22	20
18”	31	27	26	23	36	34	31	29	24	21	20	18	29	26	24	22
20”	33	30	28	26	40	37	34	31	26	23	22	20	32	29	27	24
22”	36	32	30	27	44	39	37	34	28	25	23	22	34	31	29	26
24”	38	34	32	29	47	42	39	36	30	27	25	23	37	33	31	28

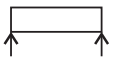

Chord Size	Load 3 125, 10, 5 psf							
	TSC2.75				TSC4.00			
O.C. Truss Spacing	12”	16”	19.2”	24”	12”	16”	19.2”	24”
Depth								
12”	14	13	12	11	17	16	14	13
14”	16	14	14	13	20	18	17	15
16”	18	16	15	14	22	20	19	17
18”	20	18	17	15	25	22	21	19
20”	22	19	18	16	27	24	22	21
22”	23	21	20	18	29	26	24	22
24”	25	22	21	18	31	28	26	24

General Notes
1) Spans shown in charts are in feet.
2) Loads shown above are outlined as Top Chord Live Load (TCLL), Top Chord Dead Load TCDL), and Bottom Chord Dead Load (BCDL).
3) Top and bottom chords designed assumed structural sheathing offers lateral restraint.
4) Deflection limits: Live Load - L/480, Total Load - L/360
5) Chases are to be located in center of span. Maximum chase width allowed is 24 inches.
6) Refer to TrusSteel Technical Bulletin TB971125 for TrusSteel floor truss design criteria.
7) Designs may include multiple gauges for top and bottom chords as determined by the truss designer, using Alpine's steelMEW engineering software. Maximum chord gauges are 43 mils (18 GA) for the TSC2.75 chord and 54 mils (16 GA) for the TSC4.00 chord.

Allowable Duct Sizes

Allowable Duct Size Table

This chart shows a sampling of available duct openings in web patterns that are available in some of the most common floor truss configurations. Sizes of allowable openings may be affected by specific floor loading conditions. Contact your TrusSteel Authorized Fabricator to discuss your specific truss needs.

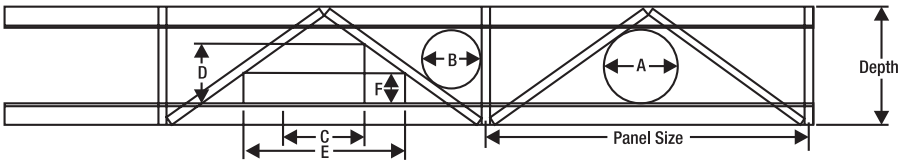

Typical Duct Opening Sizes for 2.75” Chord Size Steel Floor Truss

Depth	Panel Size	A	B	C	D	E	F
12”	60.00	6.25	6.00	14.00	5.00	20.00	4.00
14”	60.00	8.25	7.50	17.00	5.75	22.00	4.75
16”	60.00	10.25	8.75	14.00	8.00	27.00	4.75
18”	60.00	12.25	10.00	14.50	9.50	26.00	6.00
20”	60.00	14.25	11.00	14.50	11.00	26.00	7.25
22”	60.00	15.75	12.00	15.00	12.25	30.00	6.75
24”	60.00	17.25	12.75	16.00	13.25	32.00	7.00

Typical Duct Opening Sizes for 4.00” Chord Size Floor Truss

Depth	Panel Size	A	B	C	D	E	F
12”	60.00	3.75	3.75	14.00	3.75	20.00	2.75
14”	60.00	5.75	5.75	17.00	4.50	22.00	3.50
16”	60.00	7.75	7.75	14.00	6.75	27.00	3.50
18”	60.00	9.75	9.00	14.50	8.25	26.00	4.75
20”	60.00	11.75	10.00	14.50	9.75	26.00	6.00
22”	60.00	13.75	11.00	15.00	11.00	30.00	5.50
24”	60.00	15.75	12.00	16.00	12.00	32.00	5.75

All panel and duct opening size dimensions shown above are in inches.

Guide Specification – Section 05 44 00

Notes to Specifier

This section is based on products engineered by ITW Building Components Group, Inc., which is located at:

1950 Marley Drive
Haines City, FL 33844
Tel: (888) 565-9181
www.TrusSteel.com

Truss Fabricators

A nationwide network of TrusSteel Authorized Fabricators quote, build and deliver the trusses (in the same business model as wood trusses). For a list of TrusSteel Authorized Fabricators, visit www.TrusSteel.com.

Product

The TrusSteel Division of ITW Builing Components Group, the Truss Component Manufacturer, has a unique, proprietary Cold-Formed Steel (CFS) chord section that, when combined with a dedicated truss design and engineering software package, allows local fabricators to supply high quality, reliable designs with great speed and flexibility.

The CFS trusses are light in weight and easy to deliver, handle, and install, while providing resistance to insect damage, deterioration, shrinkage, fire damage, and nail popping that can affect wood truss assemblies.

The TrusSteel chord shape is a symmetrical "U" shape that avoids the eccentric loading conditions that often occur with non-symmetrical chord shapes like common steel "C" shapes, sometimes referred to as "back-to-back" shapes.

Electronic Specifications

An electronic, text-only version of this specification is available on the CD version of the manual or from www.TrusSteel.com. This specification is provided in text-only format with a minimum of formatting for use in all word processors.

Additional Notes in Specifications

This specification contains additional explanatory notes and instructions. These are indicated with a ## symbol and are printed in gray text within the body of the specification.

SECTION 05 44 00
(Section 05425 in MasterFormat 1995)

PRE-ENGINEERED PRE-FABRICATED COLD-FORMED STEEL TRUSSES

PART 1 - GENERAL

1.1 - SECTION INCLUDES

A. Pre-engineered cold-formed steel trusses.

B . Cold-formed steel framing accessories.

1.2 - RELATED SECTIONS

Delete any sections below not relevant to this project; add others as required.

A. Section 05 30 00 -Metal Decking (Section 05300 in MasterFormat 1995).

B. Section 05 40 00 - Cold-Formed Metal Framing (Section 05400 in MasterFormat 1995).

1.3 - DEFINITIONS

A. Truss Component Manufacturer: The manufacturer of the components that will be assembled into trusses by the Truss Fabricator. See MANUFACTURERS for acceptable Truss Component Manufacturer.

Delete the last sentence in the following paragraph if acceptable Truss Fabricators are not listed in PART 2.

B. Truss Manufacturer: The individual or organization that assembles the Truss Component Manufacturer's components into completed trusses. See MANUFACTURERS for acceptable Truss Fabricators.

C. Truss Design Drawing: Written, graphic and pictorial depiction of an individual truss.

D. Truss Design Engineer: Person who is licensed to practice engineering as defined by the legal requirements of the jurisdiction in which the building is to be constructed and who supervises the preparation of the truss design drawings. In this case, the Truss Design Engineer is the Truss Component Manufacturer.

E. Truss Placement Diagram: Illustration identifying the assumed location of each truss.

1.4 - REFERENCES

Delete references from the list below that are not actually required by the text of the edited section.

A. ANSI/AISI/COS/S100-07/S2-10: North American Specification for the Design of Cold-Formed Steel Structural Members; American Iron and Steel Institute; 2007 edition including the 2010 Supplement.

B. ANSI/AISI/COFS/S200-07: North American Standard for Cold-Formed Steel Framing - General Provisions; 2007.

C. ANSI/AISI/COFS/S214-07/S2-08: North American Standard for Cold-Formed Steel Framing - Truss Design; 2007 edition including the 2008 Supplement.

D. AISI/COFS - Practice Guide - CF06-1: Code of Standard Practice for Cold-Formed Steel Structural Framing; 2006.

E. ASTM A 370-09 - Standard Test Methods and Definitions for Mechanical Testing of Steel Products; 2009.

F. ASTM A 500-03a - Standard Specification for Cold-Formed Welded and Seamless Carbon Steel Structural Tubing in Rounds and Shapes; 2003.

G. ASTM A 653-09 - Standard Specification for Steel Sheet, Zinc-Coated (Galvanized) or Zinc-Iron Alloy-Coated (Galvannealed) by the Hot-Dip Process; 2009.

H. CFSBCSI - Cold-Formed Steel Building Components Safety Information; Cold-Formed Steel Council (CFSC); 2008 edition with CFSB3 summary sheet insert.

I. CFSEI Technical Note 551d - Design Guide for Construction Bracing of Cold-Formed Steel Trusses; Cold-Formed Steel Engineers Institute; February 1997.

J. CFSEI Technical Note 551e - Design Guide for Permanent Bracing of Cold-Formed Steel Trusses; Cold-Formed Steel Engineers Institute; February 1998.

1.5 - SUBMITTALS

A. Submit under provisions of Section 01 30 00 (Section 01300 IN MF95).

B. Product Data: Truss Component Manufacturer's descriptive literature for each item of cold-formed metal framing and each accessory specified in this section.

C. Truss Design Drawings: Detailed drawings prepared by Truss Manufacturer under the supervision of the Truss Design Engineer that are in accordance with AISI references. These drawings may also include referenced detail drawings germane to the trusses.

D. Truss Placement Diagram: Diagram that identifies the assumed location of each individually designated truss and references the corresponding Truss Design Drawing.

E. Installation Instructions: Truss Component Manufacturer's printed instructions for handling, storage, and installation of each item of cold-formed metal framing and each accessory specified in this section.

1.6 - QUALITY ASSURANCE

A. Provide design of trusses by Truss Component Manufacturer, using design methodologies recommended in AISI references.

1. Determine mechanical properties of load bearing components by testing in accordance with ASTM A 370-09.
2. Provide drawings by a design professional registered in the State in which project is to be constructed.
3. Provide Truss Manufacturer's Truss Design Drawings.

B. Pre-Installation Meeting: Meet at job site prior to scheduled beginning of installation to review requirements:

1. Attendees: Require attendance by representatives of the following:
   a. Installer of this section.
   b. Other entities directly affecting, or affected by, construction activities of this section, including but not limited to, the following:
      1) Installer of truss support framing.
      2) Installer of mechanical systems.
      3) Installer of electrical systems.
2. Review potential interface conflicts; coordinate layout and support provisions.

1.7 - DELIVERY, STORAGE, AND HANDLING OF STEEL TRUSSES

A. Pack, ship, handle, unload, and lift shop products in accordance with Truss Component Manufacturer's recommendations and in manner necessary to prevent damage or distortion.

B. Store and protect products in accordance with Truss Component Manufacturer's recommendations and in manner necessary to prevent damage, distortion and moisture buildup.

PART 2 -PRODUCTS

2.1 - MANUFACTURERS

ITW Building Component Group, Inc. (the Truss Component Manufacturer) produces the truss components, which are then assembled into completed trusses by one of their approved fabricators (the Truss Fabricator). Visit www.TrusSteel.com or call 888-565-9181 for a list of Truss Fabricators. A free TrusSteel Design Manual CD is also available.

A. Acceptable Truss Component Manufacturer: TrusSteel Division of ITW Building Components Group, Inc.; 1950 Marley Drive, Haines City, FL 33844. Tel: (888) 565-9181. www.TrusSteel.com.

Delete the following paragraph if it is not necessary to list acceptable Truss Fabricators. Obtain from TrusSteel a current list of Approved Truss Fabricators known to have the capability of fabricating products described in this section. List of TrusSteel Authorized Fabricators is available from www.TrusSteel.com.

B. Acceptable Truss Fabricators: Truss components shall be fabricated into completed trusses by one of the following local fabricators:

1. _____.
2. _____.
3. _____.

Delete one of the following two paragraphs; coordinate with requirements of Division 1 section on product options and substitutions.

C. Substitutions: Not permitted.

D. Requests for substitutions will be considered in accordance with provisions of Section 01 60 00.

1. All substitutions must be approved in writing by the Architect or Building Designer.
2. All applications for substitution must include samples and technical data.

2.2 - COMPONENTS

A. Pre-Engineered Pre-Fabricated Cold-Formed Steel Trusses: TrusSteel truss components, by ITW Building Components Group, Inc.; meeting specified requirements.

1. Truss Type, Span, and Height: As indicated on drawings.

Insert name of local code and deflection requirements.

2. Comply with requirements of _____ code.
3. Deflection Under All Loads : 1/_____th of span, maximum.
4. Deflection Under Live Loads: 1/_____th of span, maximum.
5. Shop fabricate in accordance with Truss Design Drawings, using jigging systems to ensure consistent component placement and alignment of components, and to maintain specified tolerances; field fabrication is strictly prohibited unless performed by authorized Truss Manufacturer using Truss Manufacturer's shop assemblers and proper jigging systems.
6. Shop fabrication of other cold-formed steel framing components into assemblies prior to installion is permitted; fabricate assemblies in accordance with shop drawings.
7. Fasten connections within truss assembly with Truss Component Manufacturer's fasteners only and as shown on the Truss Design Drawings; welding and other fasteners are prohibited.
8. Fabricate straight, level, and true, without rack, and to the tolerances specified in ANSI/AISI/COGFS/S214-07/S2-08.

B. Truss Chord and Web Components: TrusSteel components, with rolled or closed edges to minimize the danger of cutting during handling; chord and web components without rolled edges are prohibited.

1. Shapes, Sizes and Thicknesses: As required to suit design and as indicated on shop drawings.
2. Chords: Cold-formed from ASTM A653-06a galvanized steel sheet, minimum G60 coating; minimum yield strength of 55,000 psi (380 MPa).

Some TrusSteel chord members are manufactured from ASTM A653 steel of a higher grade with minimum yield strength of 55 ksi (380 MPa) and minimum tensile strength of 65 ksi (448 MPa)

a. Nominal 28 mil (22 GA) members:
1) Minimum bare metal thickness: 0.0284 inch (0.72 mm).
2) Maximum design thickness: 0.0299 inch (0.76 mm).
b. Nominal 33 mil (20 GA) members:
1) Minimum bare metal thickness: 0.0329 inch (0.84 mm).
2) Maximum design thickness: 0.0346 inch (0.88 mm).
c. Nominal 43 mil (18 GA) members:
1) Minimum bare metal thickness: 0.0428 inch (1.09 mm).
2) Maximum design thickness: 0.0451 inch (1.15 mm).
d. Nominal 54 mil (16 GA) members:
1) Minimum bare metal thickness: 0.0538 inch (1.37 mm).
2) Maximum design thickness: 0.0566 inch (1.44 mm).
e. Nominal 68 mil (14 GA) members:
1) Minimum bare metal thickness: 0.0677 inch (1.72 mm).
2) Maximum design thickness: 0.0713 inch (1.31 mm).
f. Nominal 97 mil (12 GA) members:
1) Minimum bare metal thickness: 0.0966 inch (2.46 mm).
2) Maximum design thickness: 0.1017 inch (2.58 mm).

3. Tube Webs: Cold-formed ASTM A500 steel structural tubing; minimum yield strength of 45 ksi (310 MPa); minimum tensile strength of 55 ksi (380 MPa).
a. Nominal 33 mil (20 GA) members:
1) Minimum bare metal thickness: 0.033 inch (0.84 mm).
2) Maximum design thickness: 0.035 inch (0.89 mm).
b. Nominal 47 mil (18 GA) members:
1) Minimum bare metal thickness: 0.047 inch (1.19 mm).
2)Maximum design thickness: 0.049 inch (1.24 mm).
c. Nominal 63 mil (16 GA) members:
1) Minimum bare metal thickness: 0.063 inch (1.6 mm).
2) Maximum design thickness: 0.065 inch (1.65 mm).

4. Rolled formed Webs: Cold-formed from ASTM A 653/A 653M galvanized steel sheet, minimum G90 coating; minimum yield strength of 40 ksi (276 MPa) for 20 and 18 GA components or 50 ksi (345 MPa) for 16 GA components; minimum tensile strength of 55 ksi (379 MPa) for 20 and 18 GA components or 65 ksi (448 MPa) for 16 GA components.
a. Nominal 33 mil (20 GA) members:
1) Minimum bare metal thickness: 0.0329 inch (0.84 mm).
2) Maximum design thickness: 0.0346 inch (0.88 mm).
b. Nominal 43 mil (18 GA) members:
1) Minimum bare metal thickness: 0.0428 inch (1.09 mm).
2) Maximum design thickness: 0.0451 inch (1.15 mm).
c. Nominal 54 mil (16 GA) members:
1) Minimum bare metal thickness: 0.0538 inch (1.37 mm).
2) Maximum design thickness: 0.0566 inch (1.44 mm).

C. Fasteners Used in Fabricating Trusses: Fasteners as recommended by Truss Component Manufacturer, bearing stamp of Truss Component Manufacturer for ready identification.

PART 3 EXECUTION

3.1 EXAMINATION

A. Verify that bearing surfaces and substrates are ready to receive steel trusses.

The tolerances appropriate for truss bearings surfaces are dependent on required tolerances of subsequent construction; coordinate with other sections and modify as required.

B. Verify that truss bearing surfaces are within the following tolerances:
1. Variation from Level or Specified Plane: Maximum 1/8 inch in 10 feet (6 mm in 3 m).
2. Variation from Specified Position: Maximum 1/4 inch (6 mm).

C. Verify that rough-in utilities and chases that will penetrate plane of trusses are in correct locations and do not interfere with truss, bracing or bridging placement.

D. Inspect conditions under which installation is to be performed and submit written notification if such conditions are unacceptable to installer.
1. Notify Architect/Engineer-of-Record within 24 hours of inspection.
2. Beginning construction activities of this section before unacceptable conditions have been corrected is prohibited.
3. Beginning construction activities of this section indicates installer's acceptance of conditions.

3.2 - INSTALLATION

A. Install trusses in accordance with Truss Component Manufacturer's instructions and Truss Manufacturer's Truss Design Drawings. Use correct fasteners as previously described.

B. Place components at spacings indicated on the Truss Design Drawings.

C. Install all erection (temporary installation) bracing and permanent bracing and bridging before application of any loads; follow recommendations of the CFSBCSI - Cold-Formed Steel Building Components Safety Information.

D. Install erection bracing -follow recommendations of CFSBCSI *Cold-Formed Steel Building Components Safety Information*.
1. Provide bracing that holds trusses straight and plumb and in safe condition until decking and permanent truss bracing has been fastened to form a structurally sound framing system.
2. All sub-contractors shall employ proper construction procedures to insure adequate distribution of temporary construction loads so that the carrying capacity of any single truss or group of trusses is not exceeded.

E. Install permanent bracing and bridging as shown in the Architect/Engineer-of-Record's drawings and notes and as shown in the Truss Fabricator's shop drawings.

F. Removal, cutting or alteration of any truss chord, web or bracing member in the field is prohibited unless approved in advance in writing by the Architect/Engineer-of-Record and the Truss Designer.

G. Repair or replace damaged chords, webs, and completed trusses as previously directed and approved in writing by the Architect/Building Designer and the Truss Component Manufacturer.

3.3 FIELD QUALITY CONTROL

This article is optional.

A. Owner will provide inspection service to inspect field connections; see Section 01 40 00.

Engineering

These and other reference materials are available from the American Iron and Steel Institute. See Section 8 of this Manual for contact information.

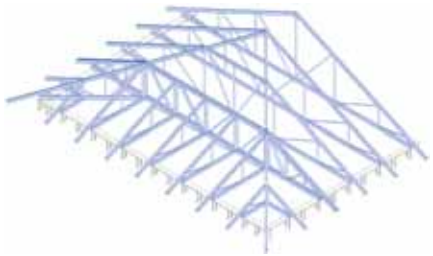

Design Responsibilities

The Committee on Framing Standards (COFS) of the American Iron and Steel Institute has created the *Standard for Cold-Formed Steel Framing - Truss Design* (latest revision is AISI S214-07/S2-08) to provide technical information and specifications on CFS truss construction. Specific design responsibilities are defined within the Standard in Section B. While these definitions are not intended to replace any other allotments of responsibilities that may be agreed upon by involved parties, they do provide a proven framework for most projects. The responsibilities, as defined in the Standard, are given below:

The Building Designer

The Building Designer shall specify the following information:

(a) design loads in accordance with Section C of the Standard
(b) roof profile and geometry
(c) bearing conditions
(d) temperature and moisture environment for the intended end use
(e) any special requirements or considerations to be taken into the truss design.

The Building Designer shall provide for the following in the design and detailing of the building:

(a) horizontal, vertical, or other truss deflection due to design loads
(b) truss movement due to temperature changes
(c) truss supports and anchorage accommodating horizontal, vertical or other reactions or displacements
(d) permanent truss bracing to resist wind, seismic, and any other lateral forces acting perpendicular to the plane of the truss
(e) permanent lateral bracing as specified by the truss designer.

Truss Designer

The Truss Designer shall make available, upon request, comprehensive design calculations including the following information:

(a) loads and load combinations considered
(b) axial forces, moments, and shears resulting from the applied loads and load combinations
(c) design assumptions.

Truss Design Drawings

The truss design drawings shall include, as a minimum, the following information:

(a) slope, depth, span, and spacing of the truss
(b) bearing locations and minimum bearing lengths
(c) design loading(s)
(d) nominal reaction forces and direction
(e) location of all truss connections
(f) gusset plate locations, sizes and material specification
(g) fastener type, size, quantities and locations
(h) shape and material specification for each component
(i) maximum nominal compressive force in all truss members
(j) locations of required permanent truss member bracing
(k) connection requirements for:
  (1) truss-to-truss girder
  (2) truss ply-to-ply
  (3) field assembly of trusses
(l) calculated deflection ratio and/or maximum deflection for live and total load.

Loading

The loads and load combinations to be used in the design of cold-formed steel trusses shall be determined by the building designer as established by the local building code. In the absence of such a code, the loads, and combinations of loads shall be in accordance with accepted engineering practice for the geographical area under consideration as specified by the appropriate sections of ASCE 7.

Engineering

Information Flow

The flow of design responsibilities within a truss project creates an information flow that must be understood by all participants. Each participant plays a key role in handling large amounts of information.

Open communication during this process is critical for the success of a project. This diagram shows the flow of responsibilities and information for a typical truss project.

Building Designer

Also called design professional and registered building designer. Creates building plans based on intended use, project programming and national and local codes.

Building Plans

Truss Fabricator

Also called Truss Manufacturer. Utilizes building plans, specifications, codes and other information from the Building Designer to obtain input parameters required to properly design the truss system.

These inputs include loading (live/dead/wind/snow/seismic/etc.), bearing elevations/locations/conditions, and other special loading, framing and geometric information necessary for the creation of a safe, economical truss system.

RFIs

steelVIEW

The Alpine steelVIEW truss layout and design software creates truss profiles, truss design requirements, and truss engineering for individual trusses. This software also does calculations, material take-offs, truss labeling, and truss framing design. steelVIEW transmits truss designs to the Alpine/TrusSteel Engineering Review Team.

RFIs

Truss Designs

Truss Designer

Also called Truss Engineer, Design Engineer or Registered Engineer. Reviews truss designs for proper loading, bearings, truss-to-truss connections and special engineering requirements. Provides PE seal for properly-designed trusses.

Sealed Design

Truss Fabricator

Also called Truss Manufacturer. Prepares submittal packages, which may include shop drawings, truss layouts, engineering calculations, standard and special construction details and installation instructions.

Submittal Package

Building Designer

Reviews and accepts Truss Design submittal or returns submittal to the Truss Fabricator for clarification or revision.

Submittal Not Approved

Submittal Approved

Truss Fabricator

Approved submittals, also called approved shop drawings, go to the truss plant. Trusses for the project will be built from these designs.

Approved Shop Drawings

Truss Plant for Fabrication

Fabricated Trusses

Trusses Delivered to Project Site

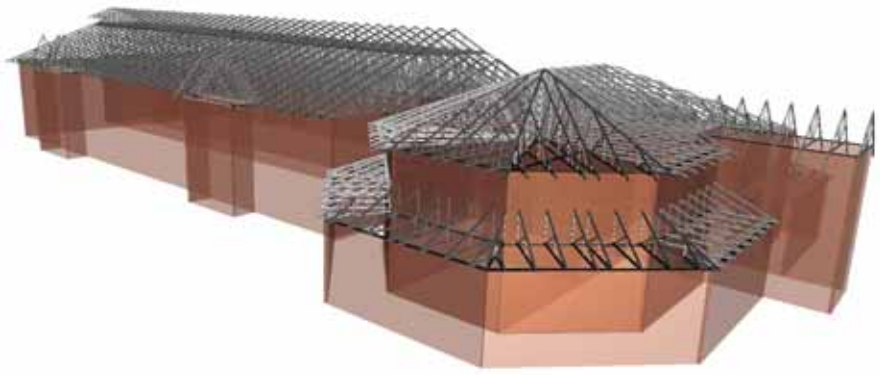

Shop Drawings

Shop drawings are the primary vehicle for transferring design information from the truss designer to the building designer for review. Clear, easy to understand shop drawings make the job of the reviewer easier and help speed the approval process. Each individual truss design is described with a unique shop drawing. Load, span, deflection and other design parameters are clearly stated. Special design criteria and bracing requirements are given, and additional details are referenced on the drawing. Every truss component member, fastener and internal connector is located and identified. Truss profile, pitch breaks and bearing points are fully dimensioned.

Individual shop drawings are often supported with engineering details. These accompanying details are referenced on the shop drawings and are included with the shop drawings in the submittal package. Common internal connection situations are referred to appropriate Standard Details. New details are created, as needed, to describe unique situations.

Key to Illustration

A Truss materials
B Special design considerations
C Truss design
D Reactions (including uplift) and bearing width
E Other considerations
F Load and spacing design parameters

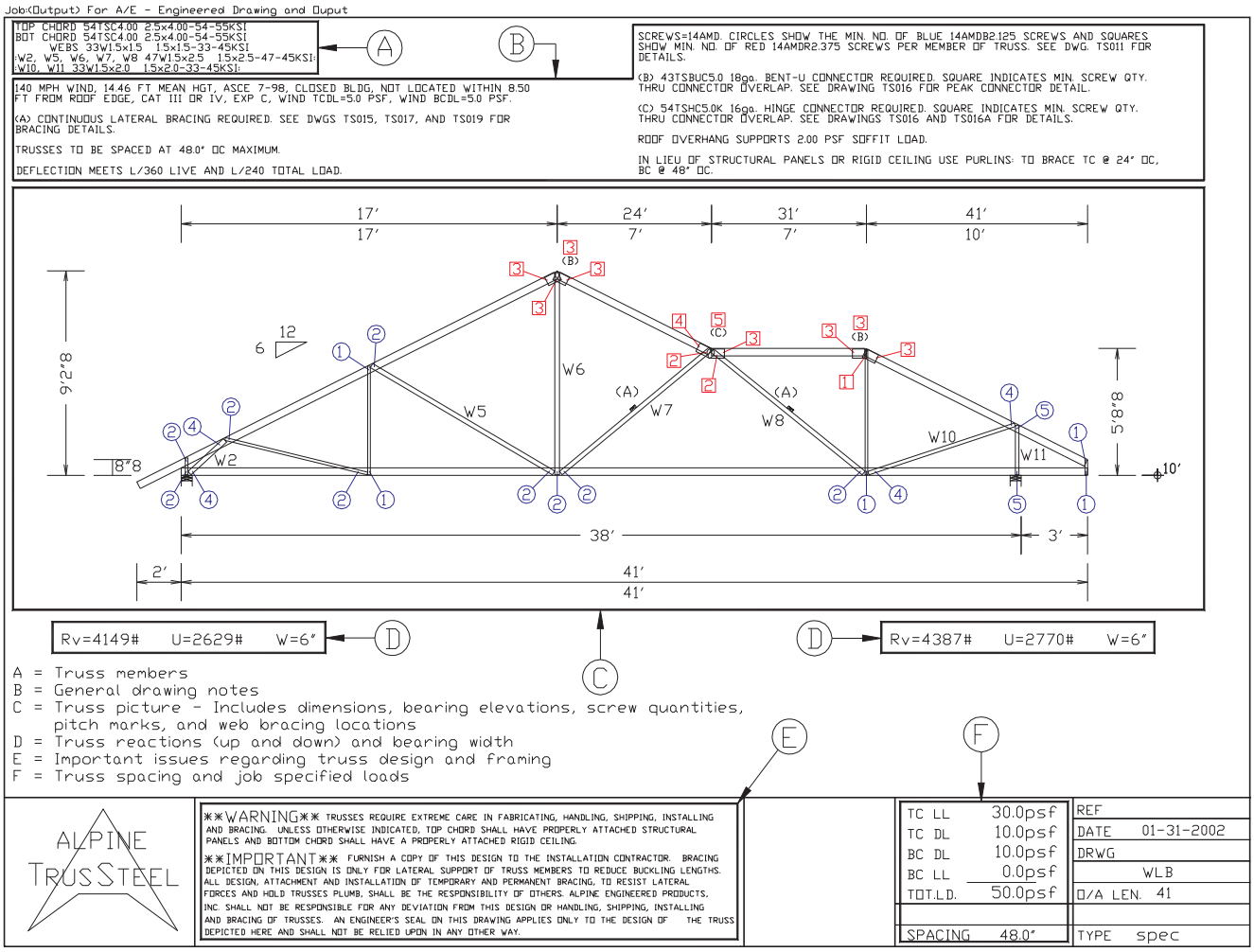

Sample drawing

Overview & Applications

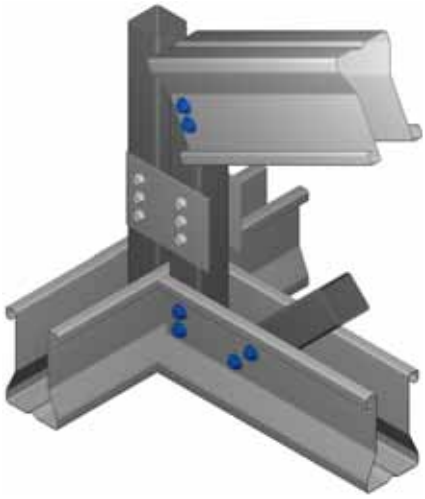

Trusses are connected to each other, as well as to other building systems and bearings, through the use of proprietary connectors (sometimes called "connectors"). These proprietary connectors, sold by Alpine, are manufactured to Alpine specifications and form an integral part of the complete TrusSteel system.

The following pages of this manual are an introduction to these connectors and their use. This introduction is not intended to be a comprehensive technical guide for each connection type. For complete technical data on each connection, please refer to the TrusSteel Standard Details.

All connectors attach to TrusSteel trusses with standard self-drilling tapping screws. Connectors attach to different bearing materials through the use of a variety of screws, pins, welds and embedded anchors.

Other Connections

The following connections are not shown in this manual - please refer to the Standard Details:

- truss fabrication connections (chord to web, chord to chord, etc.)
- assembly of multi-ply trusses (whereby several trusses are connected side-by-side to create one multi-ply truss)
- connection or suspension of mechanical loads from trusses.

General Notes for All Connections

- Connectors and fasteners specified are designed to support the loads listed in the allowable tables on the TrusSteel Standard Details and in this manual.
- Install connectors and fasteners as specified on the TrusSteel Standard Details. Refer to the Standard Details for important information not shown in this manual.
- Allowable loads have not been increased for wind, seismic or other factors.
- Install all fasteners and connectors prior to loading the connection.
- Allowable loads are listed in imperial (LBS) and metric (kN) units.
- All steel thicknesses given are actual base metal thicknesses.
- Connectors are fabricated from G-90 or equal galvanized steel.

Notes for Truss-to-Truss Connections

- Connections are designed to support vertical loads only in an upward or downward direction.

Notes on Truss-to-Bearing Connections

- Upward loads listed are MAXIMUM allowable loads.
- For lateral load capacities, see the Standard Details.
- If upward loads will be acting in combination with lateral loads, please contact a TrusSteel engineer to determine the adequacy of the connection.

General Notes for Fasteners

The fasteners specified in this publication, and on the Standard Details, shall be used in strict accordance with the Details. If an "or equal" statement appears within a Detail, the substituted fastener shall be qualified by a professional engineer prior to the installation of the substitute. The allowable load capacity of the substituted fastener shall be confirmed through reliable published test data or calculations.

Notes on Self-Drilling Tapping Screws (SDS)

- Allowable loads are determined per the AISI *North American Specification for the Design of Cold-Formed Steel Structural Members*
- SDS shall comply with ASTM C1513 or an approved design or recognized design Standard
- #10 tapping screw is 0.19" (nom. dia.)
- #12 tapping screw is 0.216" (nom. dia.)
- #14 tapping screw is 0.25" (nom. dia.)
- Screw spacing, end and edge distance shall be 3 times the nominal diameter.
- Screw point style to be determined, based upon the recommended steel thickness for the given style.
- Screw length to be determined, so that when installed the screw shows three exposed threads (out the back of the connected parts) or as otherwise determined by a professional engineer.
- References
  - *AISI/COFS/S200 North American Standard for Cold-Formed Steel Framing - General Provisions*
  - Technical Note F102-11, *Screw Fastener Selection for Cold-Formed Steel Frame Construction*, CFSEI, November 2011

Overview & Application

Notes on Wood Screws

- Allowable loads shall be determined by ANSI/AF&PA NDS
- All wood screws shall comply with ASME Standard B18.6.1 or an approved design or recognized design standard.

Notes on Hilti® Powder-Actuated Fasteners

- Shall comply with ICBO Evaluation Report ER-2388.
- Allowable loads shall be determined by ICBO Evaluation Report ER-2388.
- Shall comply with Hilti *North American Product Technical Guide*, 2005.

Notes on ITW Buildex® TAPCON® Fasteners

- Shall comply with ICC-ES Legacy Report ER-3370.
- Allowable loads shall be determined by ICC-ES Legacy Report ER-3370.
- Shall comply with ITW Buildex *Product Catalog*

Notes on Welds

- Electrode strength, weld size, length and spacing shall comply with specifications as shown on applicable TrusSteel Standard Details
- Welds shall be designed in accordance with the AISI *North American Specification for the Design of Cold-Formed Steel Structural Members*
- Welds and welding shall comply with requirements of American Welding Society (AWS) D1.3, *Structural Welding Code - Sheet Steel*.

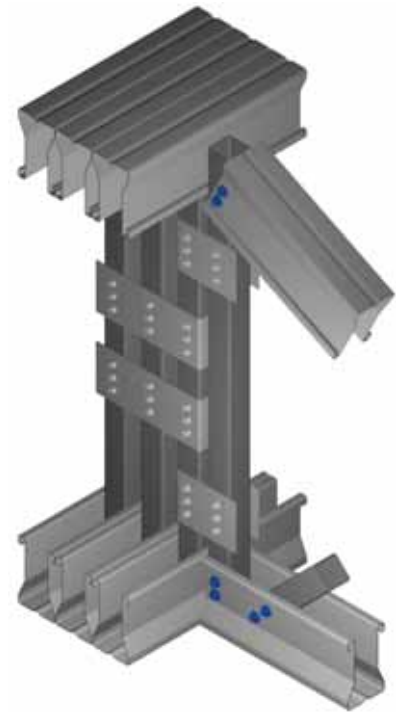

ITW Building Components Group, Inc. shall not be responsible for any performance failure in a connection due to a deviation from the Standard Details. Any variation from these Details shall be approved in advance by Alpine Engineers.

This Manual is intended for quick reference only. Drawings and illustrations shown are samples only and are not intended for detailing or construction. Please refer to the TrusSteel Standard Details for technical information on connection design, product use and safety.

Standard Details

Obtaining the Details

These Details are made available to the design community, free of charge, in DWG and DXF CAD formats as well as in the printer-friendly PDF format. TrusSteel encourages designers to incorporate these details directly into their construction documents.

Designers can obtain these Details via download at www.TrusSteel.com, or via the interactive CD version of this manual. To request the CD, please send an e-mail to info@TrusSteel.com, and include your name, your company name and your mailing address.

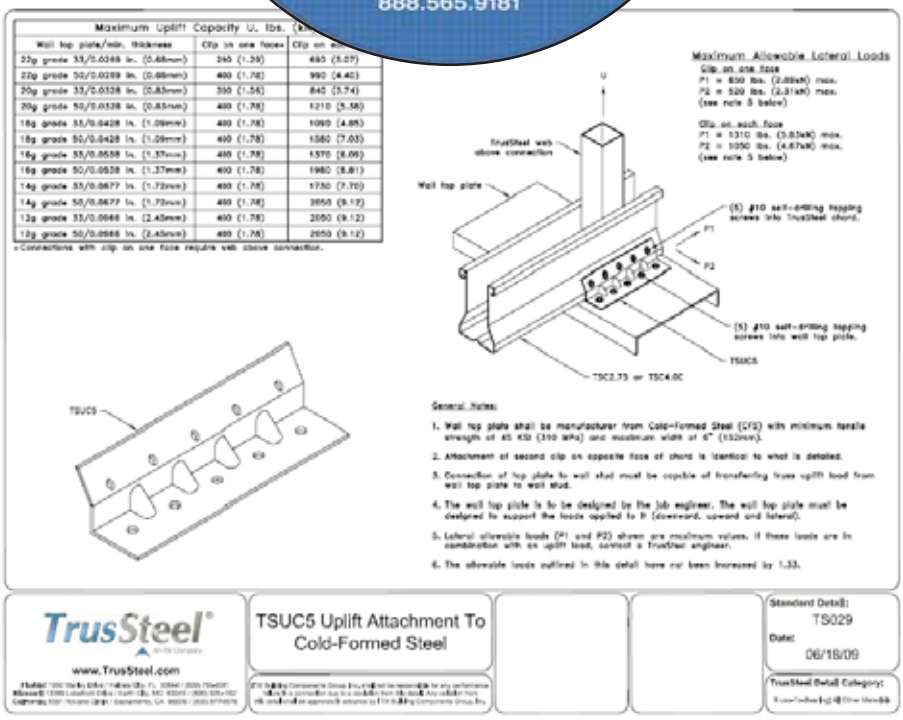

Sample Detail

Standard Details

TrusSteel has developed a library of Standard Details to assist designers in their understanding and use of these products. The library is divided into sets of details, grouped by application. Set names include:

- Bracing
- Connections: Mechanical/ Hanging
- Connections: Truss-to-Bearing
- Connections: Truss-to-Truss
- Product Properties
- Truss Framing Conditions
- Truss Internal Connections.

Details within these sets cover these applications and more:

- truss to bearing connections (CFS steel, red iron, wood and concrete bearings)
- truss bearing types (scissor, top and bottom chord bearings)
- truss internal connections, including
  - multi-ply trusses,
  - splices
  - pitch breaks
- truss bracing
- gable ends
- piggyback framing
- valley framing
- overhangs
- outlookers
- duct penetrations
- sprinkler and other hanging loads
- member section properties.

Right Angle (90°) Truss Web-to-Web Connections

Connections using TTC Clips

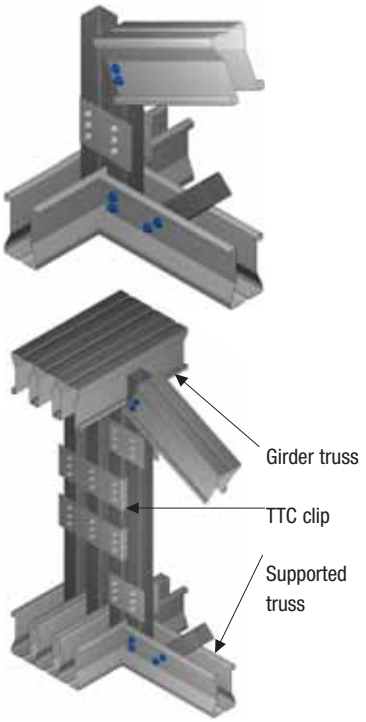

Connections with TTC clips may be made at either heel or end web of supported truss.

Description

Right angle truss-to-truss connections may be made at the truss vertical webs by using TTC clips. TTC clips may be used to fasten supported trusses to single, double and triple-ply girder trusses. TSC2.75 chord trusses require TTC3 and TTC5 clips. TSC4.00 chord trusses require TTC4 and TTC7 clips.

Fasteners

TTC clips are installed using industry-standard #10 self-drilling tapping screws. See Standard Details for fastener quantities and placement to reach Maximum Reactions.

Reference Standard Details

Please refer to these Standard Details for information regarding the selection of TTC clip sizes and installation requirements:

TS001
TS001A
TS001B
TS001C
TS001D
TS001E
TS001F

Maximum Connection Reactions

Downward and Uplift

Maximum Reaction (R) LBS (kN)	No. of Clips
1976 (8.79)	1
2470 (10.99)	2

Valid for one, two and three ply girders.

Connections using TSHDC Clips

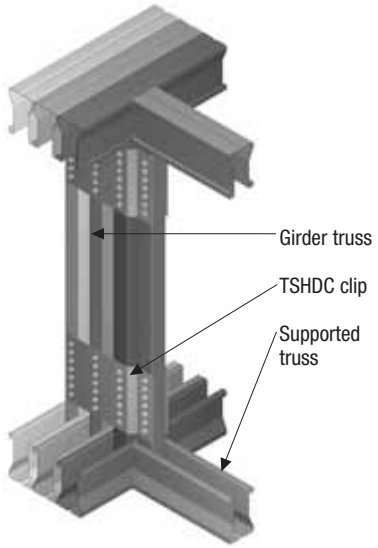

Connections with TSHDC clips may be made at either heel (not shown) or at the end web of supported truss.

Description

TSHDC clips may be used to fasten supported trusses to single, double and triple-ply girder trusses with differing web dimensions. Please refer to the appropriate Standard Details for information regarding the selection of TSHDC clip sizes and installation requirements (see table below).

Fasteners

TSHDC clips are installed using industry-standard #10 self-drilling tapping screws. See Standard Details for fastener quantities and placement to reach Maximum Reactions.

Maximum Connection Reactions

Downward and Uplift

Maximum Reaction (R) LBS (kN)	Chord Size
3500 (15.57)	TSC2.75
4700 (20.91)	TSC4.00

Valid for one, two and three ply girders.

Reference Standard Details and Clip Selection

TrusSteel Chord Size	Girder Vertical Size	Type of Clip	Standard Detail
TSC2.75	3/4" x 1-1/2"	TSHDC1.52	TS059, TS059A, TS059B
TSC2.75	3/4" x 2-1/4"	TSHDC2.252	TS059, TS059A, TS059B
TSC4.00	1-1/2" x 1-1/2"	TSCC664	TS060, TS060A, TS060B
TSC4.00	1-1/2" x 2"	TSHDC2.04	TS060, TS060A, TS060B
TSC4.00	1-1/2" x 2-1/2"	TSHDC2.54	TS060, TS060A, TS060B
TSC4.00	1-1/2" x 3-1/2"	TSHDC3.54	TS060, TS060A, TS060B

Right Angle (90°) Truss Chord-to-Chord Connections

Connections using TSJH Hangers

Description
Right angle truss-to-truss connections may be made at the truss chords by using TSJH-series hangers. TSJH-series hangers may be used to fasten supported trusses to single, double and triple-ply girder trusses.

Fasteners
Hanger connections are made using industry-standard #10 self-drilling tapping screws. Allowable loads shown are for full fastener patterns. There are also allowable load values available based upon partial fastener patterns. See the referenced Standard Details for more information.

Reference Standard Details
Please refer to these Standard Details for information regarding the selection of TSJH-series hanger sizes and installation requirements:

TS022 connecting to single ply girder trusses
TS022A connecting to single ply girder trusses
TS023 connecting to multi-ply girder trusses
TS024 connecting to multi-ply girder trusses
TS024A connecting to multi-ply girder trusses

Maximum Connection Reactions
Downward and Uplift

TSC2.75 Girder with TSC2.75 Supported Truss
Using TSJH22 Hangers

Allowable Load LBS (kN)	Girder Chord Gauge		
	28TSC 22 GA	33TSC 20 GA	43TSC 18 GA
Down	740 (3.29)	920 (4.09)	1380 (6.14)
Up	680 (3.02)	770 (3.43)	1010 (4.49)

TSC4.00 Girder with TSC2.75 or TSC4.00
Supported Truss
Using TSJH24 and TSJH44 Hangers

Allowable Load LBS (kN)	Girder Chord Gauge			
	28TSC 22 GA	33TSC 20 GA	43TSC 18 GA	54TSC 16 GA
Down	920 (4.09)	1140 (5.07)	1350 (6.01)	1360 (6.05)
Up	610 (2.71)	780 (3.47)	1010 (4.49)	1130 (5.03)

TSC2.75 supported truss connection to TSC2.75 girder truss with TSJH22 Hanger.

TSC2.75 supported truss connection to TSC4.00 girder truss with TSJH24 Hanger.

TSC4.00 supported truss connection to TSC4.00 girder truss with TSJH44 Hanger.

Variable Angle Truss Web-to-Web Connections

Connections using TTC Clips

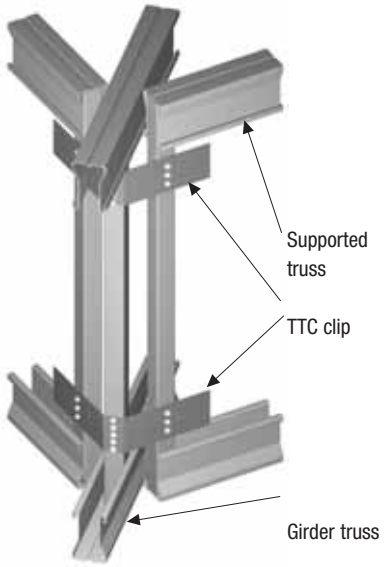

Description

Truss-to-truss connections of variable angles may be made at the truss vertical webs by using TTC clips. TTC clips may be used to fasten supported trusses to single-ply girder trusses. They are especially useful for making connections for hip jacks and corner jacks in hip sets.

Fasteners

These connections are made with #10 self-drilling tapping screws.

Reference Standard Details

Please refer to these Standard Details for information regarding the selection of TTC clip sizes, and the required quantities and placement locations of fasteners:

TS025 45° corner set
TS025A non-45° corner set
TS056 rafters
TS056A rafters

Maximum Connection Reactions

Refer to the referenced Standard Details for allowable loads.

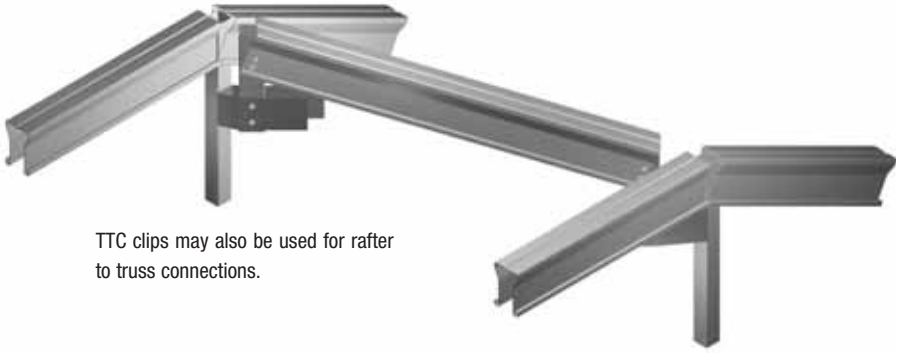

TTC clips may also be used for rafter to truss connections.

Connections at Gable Outlookers

Connections at Gable Outlookers Using ITWBCG Hardware Connectors

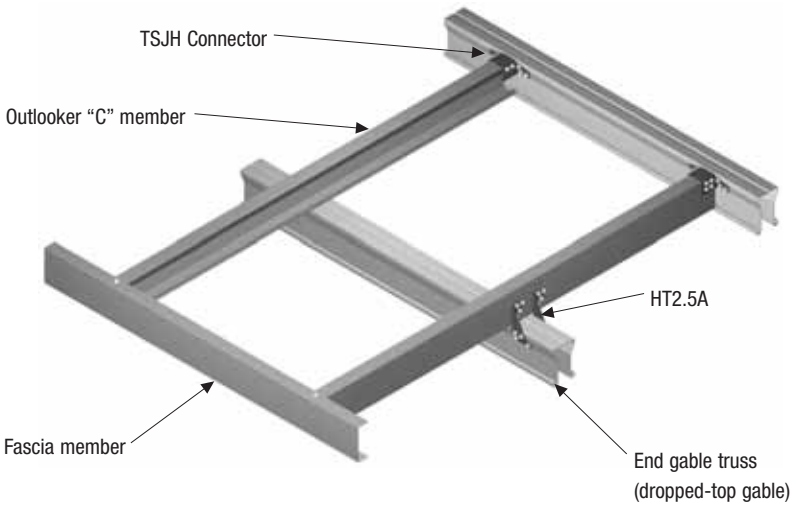

Description

In gable outlooker situations, CFS "C" framing may be attached to TrusSteel trusses using TrusSteel TSJH connectors and ITWBCG Hardware HT2.5A connectors.

Fasteners

These connectors are attached to the trusses and the "C" framing with #10 self-drilling tapping screws.

Reference Standard Details

Please refer to the Standard Detail below for information regarding the selection of HT2.5A connectors and installation requirements:

TS041

Welded Connections to CFS Steel and Heavy Steel Bearings

Connections using WTC Clips

Description

CFS trusses may be anchored to both CFS steel and heavy steel bearings using TrusSteel WTC clips. Several sizes of WTC clips are available, depending upon the required load transfer capability.

Fasteners

These clips are attached to the truss with #10 self-drilling tapping screws and are attached to the supporting members by welding. See Standard Details for welding specifications.

Reference Standard Details

Please refer to these Standard Details for information regarding the selection of WTC clips, clip sizes, top plate minimums, installation requirements and lateral load capacities:

TS027
TS027A
TS027B
TS027C

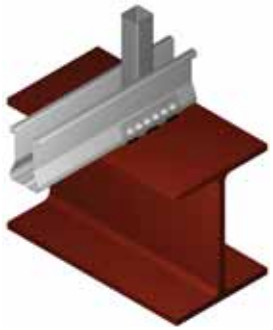

Welded connection to heavy steel using WTC Clip

Welded connection to CFS using WTC Clip

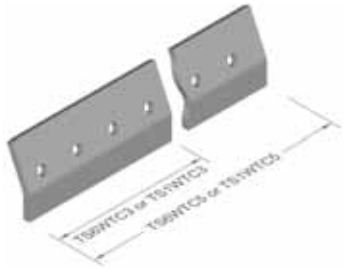

Maximum Connection Reactions - Uplift

LBS (kN)

Connections to Heavy Steel

TS6WTC3		
Chord Mil (GA)	Clip on One Face	Clip on Each Face
28TSC (22)	550 (2.45)	1640 (7.30)
33TSC (20)	550 (2.45)	2040 (9.07)
43TSC (18)	550 (2.45)	3040 (13.52)
54TSC (16)	550 (2.45)	3260 (14.50)

Refer to Standard Detail TS027

TS1WTC3		
Chord Mil (GA)	Clip on One Face	Clip on Each Face
28TSC (22)	550 (2.45)	1640 (7.30)
33TSC (20)	550 (2.45)	2040 (9.07)
43TSC (18)	550 (2.45)	3040 (13.52)
54TSC (16)	550 (2.45)	4180 (18.60)

Refer to Standard Detail TS027

TS6WTC5		
Chord Mil (GA)	Clip on One Face	Clip on Each Face
28TSC (22)	550 (2.45)	2460 (10.94)
33TSC (20)	550 (2.45)	3060 (13.61)
43TSC (18)	550 (2.45)	4560 (20.28)
54TSC (16)	550 (2.45)	5050 (22.46)

Refer to Standard Detail TS027A

TS1WTC5		
Chord Mil (GA)	Clip on One Face	Clip on Each Face
28TSC (22)	550 (2.45)	2460 (10.94)
33TSC (20)	550 (2.45)	3060 (13.61)
43TSC (18)	550 (2.45)	4560 (20.28)
54TSC (16)	550 (2.45)	6280 (27.93)

Refer to Standard Detail TS027A

Connections to CFS

TS6WTC3		
Chord Mil (GA)	Clip on One Face	Clip on Each Face
28TSC (22)	550 (2.45)	1640 (7.30)
33TSC (20)	550 (2.45)	2040 (9.07)
43TSC (18)	550 (2.45)	3040 (13.52)
54TSC (16)	550 (2.45)	3260 (14.50)

Refer to Standard Detail TS027B

TS1WTC3		
Chord Mil (GA)	Clip on One Face	Clip on Each Face
28TSC (22)	550 (2.45)	1640 (7.30)
33TSC (20)	550 (2.45)	2040 (9.07)
43TSC (18)	550 (2.45)	3040 (13.52)
54TSC (16)	550 (2.45)	4180 (18.60)

Refer to Standard Detail TS027B

TS6WTC5		
Chord Mil (GA)	Clip on One Face	Clip on Each Face
28TSC (22)	550 (2.45)	2460 (10.94)
33TSC (20)	550 (2.45)	3060 (13.61)
43TSC (18)	550 (2.45)	4560 (20.28)
54TSC (16)	550 (2.45)	5050 (22.46)

Refer to Standard Detail TS027C

TS1WTC5		
Chord Mil (GA)	Clip on One Face	Clip on Each Face
28TSC (22)	550 (2.45)	2460 (10.94)
33TSC (20)	550 (2.45)	3060 (13.61)
43TSC (18)	550 (2.45)	4560 (20.28)
54TSC (16)	550 (2.45)	6280 (27.93)

Refer to Standard Detail TS027C

Fastened Connections to CFS Steel Bearings

Connections using TSUC Clips

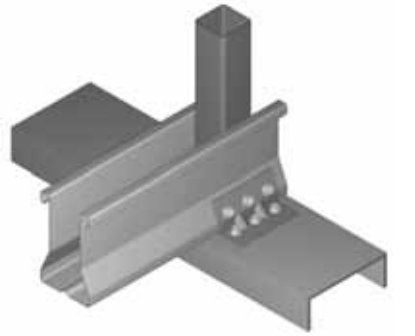

TSUC Clip attached to CFS bearing using #10 self-drilling tapping screws

Description

CFS trusses may be anchored to cold-formed steel bearings using TrusSteel TSUC clips. Several sizes of TSUC clips are available, depending upon the required load transfer capability.

Fasteners

These clips are attached to the truss and bearing with #10 self-drilling tapping screws. Note that the name for these screws is sometimes abbreviated as SDS.

Reference Standard Details

Please refer to these Standard Details for information regarding the selection of TSUC clips, clip sizes, installation requirements and lateral load capacities:

TS028
TS029

Maximum Connection Reactions - Uplift

TSUC3 Clips to CFS Bearing

Wall Top Plate Minimum Thickness		Clip On One Face LBS (kN)	Clip On Each Face LBS (kN)
Mil - Grade	IN (mm)		
28 Mil - Grade 33	0.0269 (0.68)	170 (0.76)	410 (1.82)
28 Mil - Grade 50	0.0269 (0.68)	250 (1.11)	590 (2.62)
33 Mil - Grade 33	0.0328 (0.83)	210 (0.93)	500 (2.22)
33 Mil - Grade 50	0.0328 (0.83)	310 (1.38)	730 (3.25)
43 Mil - Grade 33	0.0428 (1.09)	280 (1.25)	650 (2.89)
43 Mil - Grade 50	0.0428 (1.09)	400 (1.78)	950 (4.23)
54 Mil - Grade 33	0.0538 (1.37)	350 (1.56)	830 (3.69)
54 Mil - Grade 50	0.0538 (1.37)	400 (1.78)	1190 (5.29)
68 Mil - Grade 33	0.0677 (1.72)	400 (1.78)	1040 (4.63)
68 Mil - Grade 50	0.0677 (1.72)	400 (1.78)	1230 (5.47)
97 Mil - Grade 33	0.0966 (2.45)	400 (1.78)	1230 (5.47)
97 Mil - Grade 50	0.0966 (2.45)	400 (1.78)	1230 (5.47)

Refer to Standard Detail TS028

TSUC5 Clips to CFS Bearing

Wall Top Plate Minimum Thickness		Clip On One Face LBS (kN)	Clip On Each Face LBS (kN)
Mil - Grade	IN (mm)		
28 Mil - Grade 33	0.0269 (0.68)	290 (1.29)	680 (3.02)
28 Mil - Grade 50	0.0269 (0.68)	400 (1.78)	990 (4.40)
33 Mil - Grade 33	0.0328 (0.83)	350 (1.56)	840 (3.74)
33 Mil - Grade 50	0.0328 (0.83)	400 (1.78)	1210 (5.38)
43 Mil - Grade 33	0.0428 (1.09)	400 (1.78)	1090 (4.85)
43 Mil - Grade 50	0.0428 (1.09)	400 (1.78)	1580 (7.03)
54 Mil - Grade 33	0.0538 (1.37)	400 (1.78)	1370 (6.09)
54 Mil - Grade 50	0.0538 (1.37)	400 (1.78)	1980 (8.81)
68 Mil - Grade 33	0.0677 (1.72)	400 (1.78)	1730 (7.70)
68 Mil - Grade 50	0.0677 (1.72)	400 (1.78)	2050 (9.12)
97 Mil - Grade 33	0.0966 (2.45)	400 (1.78)	2050 (9.12)
97 Mil - Grade 50	0.0966 (2.45)	400 (1.78)	2050 (9.12)

Refer to Standard Detail TS029

Fastened Connections to Heavy Steel Bearings

Connections using TSUC Clips

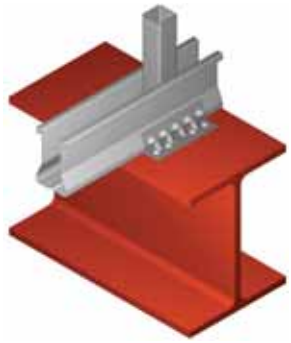

TSUC5 Clip attached to red iron bearing. See Standard Details for fastener placement.

Description

CFS trusses may be anchored to heavy steel bearings by using TrusSteel TSUC clips. Several sizes of TSUC clips are available, depending upon the required load transfer capability.

Fasteners

These clips are attached to the truss with #10 self-drilling tapping screws. Clips are attached to bearing with #12 or #14 screws, or pins.

Reference Standard Details

Please refer to these Standard Details for information regarding the selection of TSUC clips, clip sizes, installation requirements and lateral load capacities:

TS039 pins into 3/16" to 1/2" steel
TS040 pins into 3/16"to 1/2" steel
TS047 screws into 1/8" to 1/2" steel
TS048 screws into 1/8" to 1/2" steel

Maximum Connection Reactions - Uplift

Clip	Steel Thickness IN (mm)	Clip on One Face LBS (kN)	Clip on Each Face LBS (kN)	Standard Detail
TSUC3	3/16 (4.76)	400 (1.78)	1230 (5.47)	TS039
TSUC3	1/4 (6.35) to 1/2 (12.70)	400 (1.78)	1230 (5.47)	TS039
TSUC5	3/16 (4.76)	400 (1.78)	2050 (9.12)	TS040
TSUC5	1/4 (6.35) to 1/2 (12.70)	400 (1.78)	2050 (9.12)	TS040
TSUC3	1/8 (3.18) to 1/2 (12.70)	400 (1.78)	1230 (5.47)	TS047
TSUC5	1/8 (3.18) to 1/2 (12.70)	400 (1.78)	2050 (9.12)	TS048

Fastened Connections to Concrete Bearings

Connections using TSUC Clips

TSUC5 Clip attached to concrete bearing with Tapcon® fasteners.

Description

CFS trusses may be anchored to concrete bearings by using TrusSteel TSUC clips. Several sizes of TSUC clips are available, depending upon the required load transfer capability.

Fasteners

These clips are attached to the truss with #10 self-drilling tapping screws, and can be attached to the bearing with Tapcon® fasteners.

Reference Standard Details

Please refer to these Standard Details for information regarding the selection of TSUC clips, clip sizes, installation requirements and lateral load capacities:

TS030
TS031

Maximum Connection Reactions - Uplift

Clip	Concrete Strength PSI (MPa)	Clip on One Face LBS (kN)	Clip on Each Face LBS (kN)	Standard Detail
TSUC3	2000 (13.79)	n/a	520 (2.31)	TS030
TSUC3	3000 (20.68)	n/a	570 (2.54)	TS030
TSUC3	4000 (27.58)	n/a	660 (2.94)	TS030
TSUC3	5000 (34.47)	n/a	740 (3.29)	TS030
TSUC5	2000 (13.79)	400 (1.78)	520 (2.31)	TS031
TSUC5	3000 (20.68)	400 (1.78)	570 (2.54)	TS031
TSUC5	4000 (27.58)	400 (1.78)	660 (2.94)	TS031
TSUC5	5000 (34.47)	400 (1.78)	740 (3.29)	TS031

Fastened Connections to Wood Bearings

Connections using TSUC Clips

TSUC5 Clip attached to wood bearing with wood screws.

Description

CFS trusses may be anchored to wood bearings by using TrusSteel TSUC clips. Several sizes of TSUC clips are available, depending upon the required load transfer capability.

Fasteners

These clips are attached to the truss with #10 self-drilling tapping screws, and can be attached to the bearing with wood screws.

Reference Standard Details

Please refer to these Standard Details for information regarding the selection of TSUC clips, clip sizes, installation requirements and lateral load capacities:

TS032
TS033

Maximum Connection Reactions - Uplift

Clip	Wall Top Plate Species	Clip on One Face LBS (kN)	Clip on Each Face LBS (kN)	Standard Detail
TSUC3	Spruce-Pine-Fir	380 (1.69)	910 (4.05)	TS032
TSUC3	Hem-Fir	400 (1.78)	960 (4.27)	TS032
TSUC3	Douglas Fir-Larch	400 (1.78)	1230 (5.47)	TS032
TSUC3	Southern Pine	400 (1.78)	1230 (5.47)	TS032
TSUC5	Spruce-Pine-Fir	400 (1.78)	1520 (6.76)	TS033
TSUC5	Hem-Fir	400 (1.78)	1600 (7.12)	TS033
TSUC5	Douglas Fir-Larch	400 (1.78)	2050 (9.12)	TS033
TSUC5	Southern Pine	400 (1.78)	2050 (9.12)	TS033

Embedded Connections to Concrete

Connections using ITWBCG Hardware
ETAM Straps

Description
CFS trusses may be attached by ETAM straps embedded into concrete beams. These straps are attached to the truss with #10 self-drilling tapping screws. Several sizes of ETAM straps are available, depending upon the required load transfer capability. See referred Standard Details for lateral load capacities.

Reference Standard Details
Please refer to these Standard Details for information regarding the selection of ETAM Straps and installation requirements:

TS034
TS035

Fasteners
These straps are attached to the truss with #10 self-drilling tapping screws.

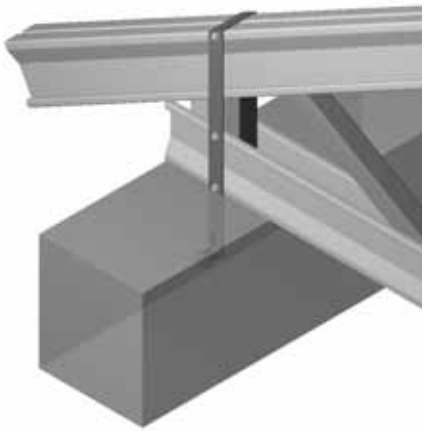

ETAM strap at truss heel or **internal bearing**

Maximum Connection Reactions - Uplift

ETAM Straps into Concrete Bearing (Internal)

No. of Screws per ETAM	ETAM on One Face		ETAM on Each Face TSC2.75 & TSC4.00 LBS (kN)
	TSC2.75 LBS (kN)	TSC4.00 LBS (kN)	
3	550 (2.45)	660 (2.94)	1320 (5.87)
4	550 (2.45)	880 (3.91)	1760 (7.83)
5	550 (2.45)	880 (3.91)	1760 (7.83)
6	550 (2.45)	880 (3.91)	1760 (7.83)

Refer to Standard Detail TS034

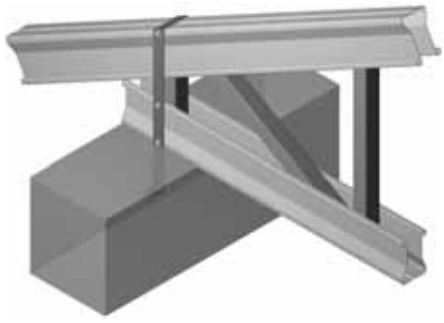

ETAMstrap at **truss heel**

Maximum Connection Reactions - Uplift

ETAM Straps into Concrete Bearing (Heel)

Top Chord	Mil (GA)	ETAM on One Face LBS (kN)	ETAM on Each Face LBS (kN)
28TSC2.75	28 (22)	530 (2.36)	1230 (5.47)
33TSC2.75	33 (20)	550 (2.45)	1530 (6.81)
43TSC2.75	43 (18)	550 (2.45)	1760 (7.83)
28TSC4.00	28 (22)	510 (2.27)	1760 (7.83)
33TSC4.00	33 (20)	660 (2.94)	1760 (7.83)
43TSC4.00	43 (18)	900 (4.00)	1760 (7.83)
54TSC4.00	54 (16)	900 (4.00)	1760 (7.83)

Refer to Standard Detail TS035

Embedded Connections to Concrete

Connections using ITWBCG Hardware GTH Connectors

TrusSteel truss anchored to concrete bearing using ITWBCG Hardware GTH-series connector and epoxy-installed threaded rod.

Description

CFS trusses may be attached to concrete bearings using GTH connectors. Several sizes of GTH connectors are available, depending upon the required load transfer capability.

Fasteners

These connectors are attached to the truss with #10 self-drilling tapping screws and the connectors are fastened to the concrete bearing using threaded rods which are installed into the concrete using an epoxy adhesive.

Reference Standard Details

Please refer to the Standard Details shown in the chart below for information regarding the selection of GTH connectors, sizes and installation requirements:

TS050
TS051
TS052
TS053
TS054
TS055

Maximum Connection Reactions - Uplift

ITWBCG Part	**Single-Ply** TrusSteel Top Chord	Mil (GA) Range	Capacity LBS (kN)	Standard Detail
GTH2	TSC2.75 w/ Seat Plate	28-43 (22-18)	4110 (18.28)	TS050
GTH2	TSC4.00 w/ Seat Plate	28-54 (22-16)	4110 (18.28)	TS050
GTH2	28TSC2.75 w/o Seat Plate	28 (22)	870 (3.87)	TS051
GTH2	33TSC2.75 w/o Seat Plate	33 (20)	1220 (5.43)	TS051
GTH2	43TSC2.75 w/o Seat Plate	43 (18)	1270 (5.65)	TS051
GTH2	28TSC4.00 w/o Seat Plate	28 (22)	810 (3.60)	TS051
GTH2	33TSC4.00 w/o Seat Plate	33 (20)	1140 (5.07)	TS051
GTH2	43TSC4.00 w/o Seat Plate	43 (18)	2100 (9.34)	TS051
GTH2	54TSC4.00 w/o Seat Plate	54 (16)	2530 (11.25)	TS051

ITWBCG Part	**Two-Ply** TrusSteel Top Chord	Mil (GA) Range	Capacity LBS (kN)	Standard Detail
GTH2	TSC2.75 w/ Seat Plate	28-43 (22-18)	5050 (22.46)	TS052
GTH4	TSC4.00 w/ Seat Plate	28-54 (22-16)	5290 (23.53)	TS054
GTH2	TSC2.75 w/o Seat Plate	28-43 (22-18)	1270 (5.65)	TS053

ITWBCG Part	**Three-Ply** TrusSteel Top Chord	Mil (GA) Range	Capacity LBS (kN)	Standard Detail
GTH3	TSC2.75 w/ Seat Plate	28-43 (22-18)	6580 (29.27)	TS055

Fastened Connections for Piggybacks

Connections using ITWCBCG Hardware HT2.5A Connectors

Description

CFS trusses in a piggyback configuration may be anchored to the top chords of base trusses using TrusSteel TTC7 clips or ITWBCG Hardware FAL Framing Anchors.

Fasteners

These connections are made with #10 self-drilling tapping screws.

Reference Standard Details

Please refer to these Standard Details for information regarding the selection and installation requirements:

TS003
TS003A
TS003B

Fastened Connections for Valley Trusses

Connections using ITWBCG Hardware HT2.5A Connectors

Truss to truss - refer to TS026

Description

CFS trusses in a valley configuration may be attached to the top chords of TrusSteel trusses using ITWBCG Hardware HT2.5A connectors.

Fasteners

These connections are made with #10 self-drilling tapping screws.

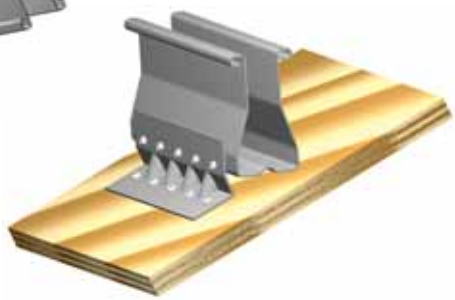

Truss to wood structural panels. - refer to TS026B

Reference Standard Details

Please refer to these Standard Details for information regarding the selection and installation requirements:

TS026	as shown at left
TS026A	to metal deck
TS026B	to wood structural panels

NOTES

Overview

Site-Fabricated vs Shop-Fabricated CFS Trusses

Prior to the emergence of pre-fabricated CFS truss systems, contractors built most CFS trusses on the jobsite using c-stud material. While many contractors were more than capable of building a CFS truss, jobsite issues such as the availability of flat terrain for truss fabrication, exposure to the elements, handling issues and the availability of experienced fabrication personnel often challenged the completion of quality trusses in a timely manner. Any one of these issues could lead to delays in truss fabrication and so to delays in one of the most critical phases of construction: the drying-in of the building.

Overall, the construction industry welcomed the advent of pre-engineered, pre-fabricated CFS trusses in the same way as they welcomed the advent of wood trusses and bar joists. These building components, assembled in a shop in advance of need and properly stored until ready for delivery, removed a burdensome jobsite task from the contractors' busy schedule and delivered a product that was generally high in quality.

The Advantages of Quality Control

TrusSteel Authorized Fabricators assemble TrusSteel CFS trusses in a truss shop environment. The reason is quality control. In-shop quality control assures that each truss is:

- assembled to dimensional tolerances (to assure a good fit at the jobsite),
- assembled in strict accordance with the materials and fastening methods described on the shop drawings (to assure specified structural performance),
- handled, stored and eventually shipped in a manner to eliminate damage.

TrusSteel supports the efforts of industry organizations, such as SBC Colf_formed Steel Council in the implementation of quality assurance standards.

The Advantages of Trained Assemblers

For a truss package to fit and perform according to dimensional and structural specifications, the truss fabricator must assemble each individual truss to exacting standards. The fabricator must use trained sawyers and proper cutting and jigging equipment to ensure the trusses will have straight chords, tight joints and to maintain consistency of pattern from one truss to the next. Trained assemblers should install fasteners to ensure the accuracy of each internal connection and to avoid commonplace problems such as the over-torquing of fasteners.

The Advantages of Proper Equipment

TrusSteel is the only proprietary CFS truss technology supplier that offers a complete line of truss fabrication equipment. Drawing upon Alpine's more than forty years of experience in wood truss fabrication equipment, TrusSteel offers a complete line of cutting, measuring, jigging and handling systems.

TrusSteel provides a line of band saws for materials cutting that are safe, quiet and accurate. By teaming these saws with an automatic or manual measuring system, a sawyer can greatly improve his output while maintaining strict dimensional standards.

Sophisticated full-automatic jigging systems, such as the AutoSet C, allow the electronic transfer of truss profile data directly to the jig table. Semi-automatic jigging systems, such as the AutoSet, and manual jigging tables can allow any truss shop to make quick and accurate setups.

Truss ejector systems, roller beds and stacking systems can make truss handling quick, simple and safe. Specialty presses, metalworkers and swagers expedite the assembling of the most complicated trusses and complete this comprehensive product line.

Overview

Truss Size Limitations

Handling and shipping issues limit the size of individual CFS trusses. Smaller trusses can be joined in the field (field splicing) to create larger trusses. Practical limits for handling and shipping will vary depending upon the capabilities of the individual truss shop and the distance to the jobsite. Contact your local TrusSteel Authorized Fabricator for specific information.

The Advantages of TrusSteel

The advantages of TrusSteel in the fabrication process translate into advantages to the designer, contractor and owner. The fact that the proprietary shape is easy and stable to handle makes for faster assembly just as it makes for stronger, lighter, stiffer trusses in the field. Rolled chord edges and closed tube webs make for safer handling in both shop and field. Proprietary, color-coded fasteners make for quick, accurate assembly just as they make it easier for field inspection. The in-plane assemblies of components in the trusses allow the creation of tight bundles that stack and unstack efficiently at the shop and jobsite and are more resistant to handling damage.

The Authorized Fabricator Advantage

Each TrusSteel Authorized Fabricator is an independently owned and operated local/regional truss fabrication shop. Authorized Fabricators market and service truss projects in their own region, backed by the forty continuous years of truss experience. Taken together, the nationwide network of TrusSteel Authorized Fabricators forms a vast array of truss and framing knowledge at the disposal of the designer and installer.

Truss Jigging Systems

Alpine Equipment's Steel AutoSet C™ and Steel AutoSet™ Jigging Systems brings accuracy and automation to the steel truss fabrication shop.

When the Steel AutoSet C is used with the Alpine steelVIEW software, truss jig setups are created automatically as the truss is designed. Setups are then transferred to the shop floor, where a single shop worker can adjust the jig rail stops within seconds (using the AutoSet C touch-screen input computer terminal).

Truss fabrication setups on the AutoSet and AutoSet C are fast, accurate, and repeatable. No special tools are required to operate the jigging systems. Setups on the AutoSet System are made in minutes by a single worker using a driver gun and a digital counter.

Both the Steel AutoSet C and the Steel AutoSet Jigging Systems can be used for the fabrication of all types of cold-formed components.

Truss Handling Systems

An integral truss ejector system speeds the removal of completed trusses from the jig. And, because the ejectors do the lifting, shop workers are subject to less strain and fatigue. Less fatigue means workers remain more productive. Conveyor runs, truss stackers and other handling equipment are also available from TrusSteel.

ALPINE EQUIPMENT
A Division of ITW Building Components Group, Inc.

Site Conditions & Safety

Safety is no accident. Safe work habits and a safe work environment are the responsibility of everyone on the job site. All injuries can be prevented through appropriate training, awareness and actions. Proper safety equipment, such as glasses, hard hats, shoes and harnesses, must be used consistently and correctly.

Site conditions

Proper site conditions for the installation of trusses are primarily the responsibility of the owner's representative for construction. Unless otherwise designated, that representative is usually the general contractor or the construction manager.

The American Iron and Steel Institute has published guidelines for establishing good site practices. The following list of responsibilities is taken from the AISI/S202. Designations shown in parentheses refer to the corresponding sections of that publication.

(F2.1) The installer of CFS trusses shall be permitted to use the most efficient and economical method and sequence of installation or assembly available consistent with the contract documents. When the owner contracts separately with a component manufacturer and installer, the owner is responsible for coordinating work between contractors.

(F2.2) The installer shall examine areas and conditions under which framing materials are to be installed. Work shall not proceed until unsatisfactory conditions have been corrected by those responsible.

(F2.3) The owner's representative for construction shall provide and maintain adequate access necessary for equipment and framing materials to be installed. The owner's representative for construction shall provide the installer with level, convenient, and adequate space to safely use the necessary equipment and install the framing materials.

(F2.4) The contractor shall coordinate setting drawings, dimensional problems, compatibility of various trades and / or installation.

Bracing

All temporary installation bracing, permanent bracing and bridging must be fully and correctly installed prior to the application of any loads, including any temporary loads resulting from construction procedures. Refer to Section 7 in this Manual for more information.

Installation Tolerances

Structural members and component assemblies shall be installed in accordance with the tolerances prescribed in the AISI/S200: North American Standard for Cold-Formed Steel Framing - General Provisions. Trusses shall be installed in accordance with the additional requirements of the AISI/S214: North American Standard for Cold-Formed Steel Framing - Truss Design.

Field Modifications and Repairs

Removal, cutting or alteration of any truss chord, web or bracing member in the field is prohibited, unless approved in advance, in writing, by the truss designer (Truss Component Manufacturer).

Field Quality Control

Trusses shall be installed in accordance with the requirements of the AISI/S214: North American Standard for Cold-Formed Steel Framing - Truss Design. and with any standards and requirements set forth in the construction documents. The owner's representative for construction will provide inspection service to inspect field connections.

Handling & Storage

TrusSteel trusses are often light enough for two men to unstack and stage.

Horizontal storage of trusses.

Vertical storage using a rack or stand. Always stake trusses to prevent toppling.

Material Receiving

Inspect all CFS materials immediately upon arrival. Report all damaged or missing material immediately to vendor and note all damage on carrier's shipping documents.

Material Handling

Finished CFS trusses are usually banded with steel strapping in conveniently sized bundles. The strapping helps maintain truss alignment and the bundle strength minimizes damage during delivery and storage. WARNING: Exercise care when removing strapping to prevent injury. Throughout all phases of construction, care must be taken to avoid excessive lateral bending of the trusses which can cause joint and member damage.

If possible, CFS trusses should be unloaded on relatively smooth ground. They should not be unloaded on rough terrain that would cause undue lateral strain resulting in distortion of the truss joints. Rough terrain can also cause damage to overhangs, soffit returns and other parts of the truss.

Always lift long pieces of material from more than one lift point to avoid crimping. Take care when banding; do not crimp or bend material. Do not store other materials on top of CFS materials.

Material Storage

Formed CFS components made of galvanized steel material shall be stored in a low moisture environment. Under no circumstances should stored material be allowed to become wet. When stored in bundles, materials shall be stored at an incline to promote the drainage of any moisture and to avoid moisture build-up in and on the parts.

Storage area shall have good ventilation. Areas that have poor ventilation, and that have the potential for trapping moist air in rising temperatures, can create a 'hot house' effect that may cause condensation between the layers of rolled or bundled material. This trapped condensation can have the same effect on stored material as exposing it to direct moisture. For long-term storage, inspect bundled materials regularly to assure that moisture has not penetrated the bundle.

Storage environments shall be ventilated to avoid temperature differentials in excess of 20ºF between the stored material and the ambient temperature of the storage. Environments that allow temperature differentials in excess of 20ºF can promote moisture condensation on materials.

Cold steel materials shall be allowed to warm properly before storage. The rapid warming of incoming materials (when moved from a cool environment to a warm environment) can create condensation. If incoming galvanized steel feels cold to the touch, allow it to warm slowly in a cool indoor area away from drafts. When the steel has warmed it may be transferred to a proper storage area.

If trusses are stored in the vertical position, they should be staked on both sides of the bundle to prevent toppling and personal injury.

These storage instructions must be followed to avoid chalking on any galvanized materials (truss, stud, track, etc.). Chalking is created by the invasion of moisture between two zinc coated surfaces that are not allowed to dry in an environment having adequate air flow. The chalking is created through a chemical reaction between the two surfaces when they are stored in an oxygen deprived atmosphere.

Lifting & Staging

This installer is using a heavy steel truss as a strongback.

WARNING: Exercise care when removing strapping to prevent injury.

Proper Lifting of CFS Trusses

Trusses may be installed manually, by crane, or by forklift, depending on truss size, wall height and job conditions. Individual trusses should always be carried vertically to avoid lateral strain and damage to joints and members.

Trusses installed manually are slid into position over the sidewall and rotated into position using poles. The longer the span, the more workers needed to avoid excessive lateral strain on the trusses. Trusses should be supported at joints and the peak while being raised.

Large trusses should be installed by a crane or forklift employing chokers, slings, spreader bars and strong-backs to prevent lateral bending. Trusses may be lifted singly, in banded groups, or in pre-assembled groups or rafts.

Tag lines should always be used to control movement of trusses during lifting and placement. Workers should always use all appropriate safety equipment.

Storage of Materials During Installation

Care must be taken, after truss installation, not to overload trusses with the storage of other building materials. Under no circumstances should any materials be stored on top of unbraced trusses!

Reference Document

Refer to the CFSC *Cold-Formed Steel Building Component Safety Information* document CFSBCSI before handling or installing trusses. This document is available from the CFSC at www.cfsc.sbcindustry.com/cfsbsci.php.

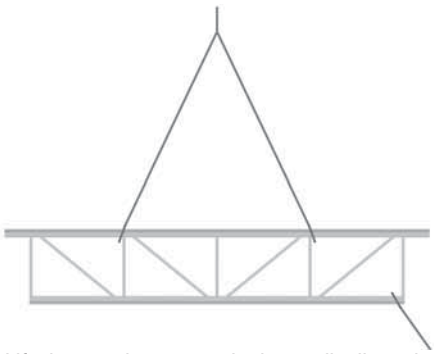

Lift shown using a spreader bar to distribute the load. Tag lines must be used during lifting.

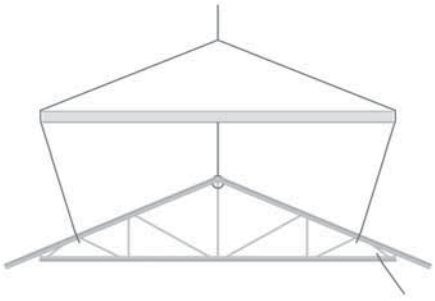

Lift shown using a spreader bar to distribute the load. Tag lines must be used during lifting.

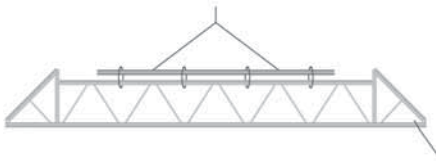

Lift shown using a strongback to distribute the load. Tag lines must be used during lifting.

Bracing

Examples of permanent bracing at truss heels, using cross-bracing (top) and trusses as blocking (bottom)

Bracing and Structural Performance

The structural performance of a frame building depends on continuous paths for all loads to be transferred to the ground. In the specific instance of pre-engineered trusses, there are two types of necessary bracing which are sometimes confused: construction (temporary) and permanent bracing. Each is important to the construction process and to the structural integrity of the building.

Construction (Temporary) Bracing

This is the proper bracing of the trusses during the installation phase of the structure. Much like walls are braced until the completion of the framing process, when trusses are placed on the plate line, they must be braced to hold them safely and securely in place, and to resist environmental influences such as wind gusts during the framing process. Construction bracing guidelines are available through truss industry documents for truss spans up to 60 ft. For spans over 60 ft. a professional engineer should be consulted for the construction bracing plan.

Permanent Bracing

Permanent bracing typically includes continuous lateral bracing (CLB), diagonal bracing, bridging and blocking at the heels and ends of the trusses. This bracing functions to strengthen and stabilize the truss chords and webs which may be particularly long or highly stressed. The required locations of the continuous lateral bracing are typically called out on the shop drawings supplied by the truss engineering company. These lateral braces must be stabilized at regular intervals with diagonal bracing. This extremely important bracing system creates the continuous path through which all loads applied to the roof are transferred from the truss system into the walls and eventually to the ground.

Due to the component-centered nature of our fast track building process, permanent bracing design is not supplied by the wall panelizer or designer, or by the truss fabricator, because neither party controls the design process of the other component. To bridge this gap in the information process, a number of engineering firms are beginning to provide permanent bracing design based on their review of the wall and truss layouts supplied by separate parties.

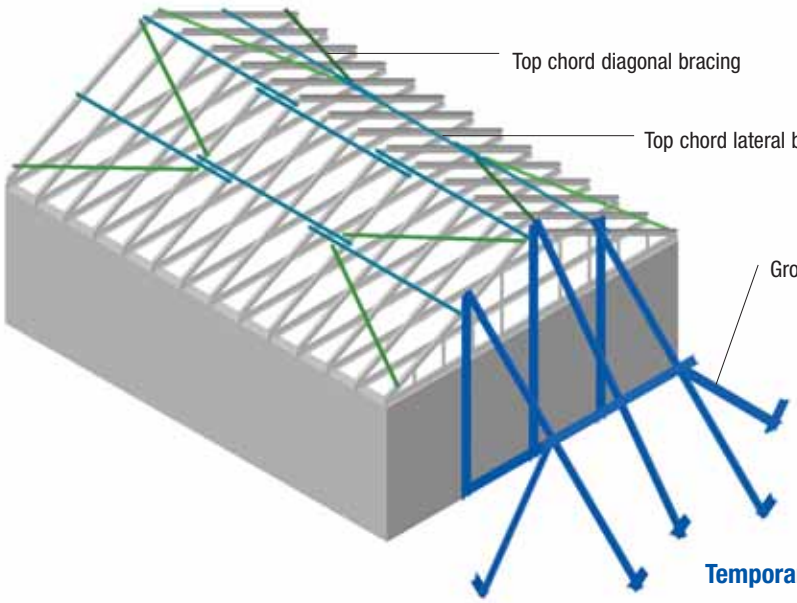

Temporary Bracing for Installation

Rafting

How do I get an engineered raft?

Rafts of trusses, no matter the brand or type, must be engineered so that they will lift safely and without causing damage to the trusses. The project Engineer of Record may perform this design service. Specialty engineering firms, such as BBD Engineering and Design, LLC, are available to perform these design services on a consulting basis.

What is rafting?

Rafting is a process where the installer uses complete trusses to assemble an entire roof, or section of a roof, on the ground and then lifts the completed assembly onto the building structure. The size of rafted sections is based on available space on-site, lift capacity of the available crane, or unique footprint of the roof system.

Why use rafting?

On suitable projects, rafting allows most of the roof framing and decking to be assembled on the ground, minimizing or eliminating the need for multiple lifts, scaffolding and fall protection systems. Less lifts means less crane time, which can translate into big savings on crane costs. On-ground assembly of entire roof sections, including permanent truss bracing, roof decks and mechanical systems, can save significant labor time and can allow the simultaneous construction of walls and roof systems.

What are the special considerations for rafting?

The design of the roof assembly to be rafted should consider the effect of an alternate load path, where the weight of the assembly is transferred through the lifting cables (or straps) to the ground at pick points instead of through the truss bearings. The number and location of pick points for rafting should be determined with attention to the following factors:

- total weight of the assembly,
- weight distribution in the assembly,
- truss configuration,
- crane capacity.

In addition to design analysis for conventional roof loads, rafted trusses must also be analyzed for a case where the supports are at the pick points. In some instances, the permanent bearing members for the trusses (tube steel or I-beam, for example) could be included as a part of the assembly on the ground, and the entire assembly could be lifted from pick points located on the bearing members. Adequate bracing of trusses is needed for the stability of the roof system. Most of the roof decking, and almost all of the required truss permanent bracing for the webs and bottom chord, could be installed prior to rafting.

Why raft with TrusSteel?

TrusSteel trusses are light in weight (up to one-half the weight of trusses made from wood or "C" channel materials). Substantial roof sections can be assembled on the ground and then lifted with an average crane. With the exceptional lateral stability (stiffness) of TrusSteel trusses, roof assemblies can be built that will survive a lift without introducing significant extra bracing.

Industry Resources

These organizations and materials can provide resources for the design, use and installation of CFS framing as well as an overview of good construction practices. Please contact the publisher or group directly for further information.

American Institute of Architects (AIA)
202-626-7300 www.aia.org
Locate architects and find information on the profession, contract documents and more.

American Institute of Steel Construction (AISC)
312-670-2400 www.aisc.org

American Iron and Steel Institute (AISI)
202-452-7100 www.steel.org
AIS S100-07: *North American Specification for the Design of Cold-Formed Steel Structural Members*; American Iron and Steel Institute; 2007 Edition with Supplement 2
AISI-S200-07: *AISI North American Standard for Cold-Formed Steel Framing - General Provisions*; 2007 Edition.
AISI-S202-11: *AISI Code of Standard Practice for Cold-Formed Steel Structural Framing*; 2011 Edition.
AISI-S214-07: *AISI Norh American Standard for Cold-Formed Steel Framing - Truss Design,* 2007 Edition.

American National Standards Institute (ANSI)
212-642-4900 www.ansi.org
Administers and coordinates U.S. voluntary standards.

American Society of Civil Engineers (ASCE)
800-548-2723 www.asce.org
Minimum Design Loads for Buildings And Other Structures, ASCE 7-10
Structural Engineering Institute
STRUCTURE magazine

American Society for Testing and Materials (ASTM)
610-832-9585 www.astm.org
ASTM E-119 - *Test Methods for Fire Tests for Building Construction and Materials*
ASTM A 370-06 - *Standard Test Methods and Definitions for Mechanical Testing of Steel Products.*
ASTM A 500-03a - *Standard Specification for Cold-Formed Welded and Seamless Carbon Steel Structural Tubing in Rounds and Shapes.*
ASTM A 653-06a - *Standard Specification for Steel Sheet, Zinc-Coated (Galvanized) or Zinc-Iron Alloy-Coated (Galvannealed) by the Hot-Dip Process.*

Association of Crane & Rigging Professionals
800-690-3921 www.acrp.net
Gain expertise in lifting and handling building materials.

Association of the Wall and Ceiling Industry
703-534-8300 www.awci.org
AWCI-SFA Steel Framing Education Program
AWCI Construction Dimension magazine
AWCI bookstore

Center for Cold-Formed Steel Structures (CCFSS)
573-341-4471 http://campus.umr.edu/ccfss/
CCFSS Technical Bulletins
CCFSS Newsletter
Educational seminars

Construction Specifications Institute (CSI)
800-689-2900 www.csinet.org
MasterFormat 2004
Construction Specifier magazine
National CAD Standard

Design-Build Institute of America (DBIA)
202-682-0110 www.dbia.org
DBIA bookstore
Numerous educational resources

Gypsum Association
202-289-5440 www.gypsum.org
Fire Resistance Design Manual, GA-600

International Code Council (ICC)
888-422-7233 www.iccsafe.org
The International Building Code
ICC-ES Evaluation Service
www.icc-es.org

Cold-Formed Steel Engineers Institute (CFSEI)
202-263-4488 www.cfsei.org
CFSEI 551d - *Design Guide: Construction Bracing of Cold-Formed Steel Trusses*; September 2002.
CFSEI 551e - *Design Guide: Permanent Bracing of Cold-Formed Steel Trusses*; February 1998.
CFSEI 551f - *Specifying Pre-Engineered Cold-Formed Steel Floor and Roof Trusses*; October 1998.
Newsletters
Research Notes

Occupational Safety and Health Administration (OSHA)
Directorate of Construction
202-693-2020 www.osha.gov
Safety regulations and procedures

The Steel Framing Alliance
202-785-2022
www.steelframingalliance.com
Various technical and marketing documents
Training for steel framers

Metal Construction Association
847-375-4718 www.metalconstruction.org
Metalcon Show

SBCA Cold-formed Steel Truss Council (CFSC)
608-274-4849 www.cfsc.scbindustry.com
Truss labels
Truss educational programs
Quality program
CFSBCSI document

Steel Deck Institute (SDI)
847-458-4647 www.sdi.org
Diaphragm Design Manual

Steel Recycling Institute (SRI)
800-937-1226 www.recycle-steel.org
Steel Takes LEED with Recycled Content°®

Underwriters Laboratories (UL)
877-854-3577 www.ul.com
UL Fire Resistance Directory

U.S. Green Building Council (USGBC)
202-828-7422 www.usgbc.org
Information on the LEED program

Glossary

Accepted Engineering Practice An engineering approach that conforms to accepted principles, tests, technical standards, and sound judgment.

ASD (Allowable Strength Design) Method of proportioning structural components such that the allowable strength equals or exceeds the required strength of the component under the action of the ASD load combinations.

ASD Load Combination Load combination in the applicable building code intended for allowable strength design (allowable stress design).

Allowable Strength* Nominal strength divided by the safety factor, Rn/Ω.

Applicable Building Code Building code under which the structure is designed.

Available Strength* Design strength or allowable strength as appropriate.

Approved Approval by a building official, code official, design professional, or authority with jurisdiction.

Axial Force The number of pounds of tension or compression in a truss member acting parallel to the length of the member resulting from a load applied to the truss.

Base Metal Thickness The thickness of bare steel exclusive of all coatings.

Bearing Structural support of a truss, usually walls, beams, concrete slabs and hangers.

Bending Moment A measure of the amount of bending in a member due to forces acting perpendicular to the member.

Blocking C-shaped, track, brake shape, or flat strap material attached to structural members, flat strap, or sheathing panels to transfer shear forces.

Bottom Chord A horizontal (or inclined in a scissor truss) member that establishes the lower edge of the truss, usually carrying combined tension and bending stresses.

Braced Frame An essentially vertical truss system that provides resistance to lateral loads and provides stability for the structural system.

Bracing Structural elements that are installed to provide restraint or support (or both) to other framing members so that the complete assembly forms a stable structure.

Bridging Cross-bracing or blocking placed between joists to provide lateral support.

Buckling A kink, wrinkle, bulge, or other loss in the original shape of a member due to compression, bending, bearing, or shear loads.

Building Designer Also referred to as design professional and registered building designer is an individual or organization responsible for the overall building design in accordance with the statutes and regulations governing the professional registration and certification of architects or engineers of the jurisdiction where the building will be located.

Camber An upward vertical displacement built into a truss, usually to offset deflection due to dead load.

Cantilever The part of a structural member that extends beyond its support.

Chord Member A structural member that forms the top or bottom component of a truss.

Clear Span Horizontal distance between interior edges of supports.

Cold-Formed Sheet Steel Sheet steel or strip that is formed by (1) press-braking blanks sheared from sheets or cut length of coils or plates, or by (2) continuous roll forming of cold- or hot-rolled coils of sheet steel; both forming operations are performed at ambient room temperature, that is, without the addition of heat such as would be required for hot forming.

Cold-Formed Steel Structural Member Shape manufactured by press-braking blanks sheared from sheets, cut lengths of coils or plates, or by roll forming cold- or hot-rolled coils or sheets; both forming operations being performed at ambient room temperature, that is, without manifest addition of heat such as would be required for hot forming.

Collateral Load The weight of any non-moving equipment or material, such as ceilings, electrical or mechanical equipment, sprinkler systems, plumbing, or ceilings.

Combined Stress The combination of axial and bending stresses or shear and bending stresses acting on a member simultaneously. These stresses typically occur in both top and bottom chords.

Concentrated Load A load, in addition to uniform design loads, applied at a specific point. Examples include cranes, hoists, HVAC equipment and sprinkler pipes.

Compression A force caused by loads being placed on a member that causes a squeezing or shortening effect of the member as in the top chord of a truss when load is applied.

Component Assembly A fabricated assemblage of cold-formed steel structural members that is manufactured by the component manufacturer, which may also include structural steel framing, sheathing, insulation or other products.

Component Design Drawings The written, graphic and pictorial definition of an individual component assembly, which includes engineering design data.

Component Designer The individual or organization responsible for the engineering design of component assemblies. See Truss Designer.

Component Manufacturer The individual or organization responsible for the manufacturing of component assemblies for the project. See Truss Manufacturer.

Component Placement Diagram The illustration supplied by the component manufacturer identifying the location assumed for each of the component assemblies which references each individually designated component design drawing.

Glossary

Connection Combination of structural elements and joints used to transmit forces between two or more members.

Construction Manager The individual or organization designated by the owner to issue contracts for the construction of the project and to purchase products.

Continuous Lateral Bracing A member placed and connected at right angles to a chord or web to prevent buckling. Required on some chords and webs, depending on their length and the forces in the member.

Contract Documents The documents, including, but not limited to, plans and specifications, which define the responsibilities of the parties involved in bidding, purchasing, designing, supplying, and installing cold-formed steel framing.

Contractor The individual or organization that is contracted to assume full responsibility for the construction of the structure.

Cricket A portion of a roof where it is built up for the purpose of draining water towards a desired drainage point.

C-Shape A cold-formed steel shape used for structural and nonstructural framing members consisting of a web, two flanges, and two lips (edge stiffeners). The name comes from the member's C-shaped cross-sectional configuration. It is also called a "C-section." Web depth measurements are taken to the outside of the flanges. Flange width measurements also use outside dimensions.

Dead Loads Dead loads are the weight of the walls, partitions, framing, floors, ceilings, roofs, and all other permanent construction entering into and becoming a part of a building.

Deflection Movement of a structural member, like a truss in place, due to the application of loads. Deflection is usually downward, but trusses may deflect upward or horizontally depending on loads and bearings.

Design Load Applied load determined in accordance with either LRFD load combinations or ASD load combinations, whichever is applicable.

Design Strength* Resistance factor multiplied by the nominal strength: $\varphi \times Rn$.

Design Professional An individual who is registered or licensed to practice his or her respective profession as defined by the statutory requirements of the state in which the project is to be constructed.

Design Thickness The steel thickness used in design which is equal to the minimum base metal thickness divided by 0.95.

Diaphragm Roof, floor or other membrane or bracing system that transfers in-plane forces to the lateral force resisting system.

Double Shear Allowing a force to be distributed through two planes rather than one for increased strength.

Double Shear™ Fastener Patented TrusSteel fastener that allows the fabrication of trusses without flipping in the jig. Double shear action of these fasteners add stability to trusses.

Drag Strut Typically a horizontal member, such as a truss or beam, which transfers shear from a diaphragm to a shearwall.

Eave Overhang The horizontal projection of the roof measured from the outside face of the exterior wall framing to the outside edge of the roof.

Epicenter The part of the earth's surface directly above the focus of an earthquake.

Flange That portion of a framing member or track that is perpendicular to the web.

Factored Load Product of a load factor and the nominal load.

Flat Strap Sheet steel cut to a specified width without any bends and typically used for bracing and transferring loads by tension.

Flashing Pieces of cold-formed steel that are used to make watertight the openings or the seams in a roof system.

Flexural-Torsional Buckling Buckling mode in which a compression member bends and twists simultaneously without change in cross-sectional shape.

Floor Joist A horizontal structural framing member that supports floor loads and superimposed vertical loads.

Foundation The structural elements through which the load of a structure is transmitted to earth.

Gable End A vertical surface formed at the end of a roof ridge down towards the eave.

Gauge A unit of measurement traditionally used to describe the nominal thickness of steel. The lower the gauge the greater the thickness.

ASTM C955 Color Codes for CFS Steel

Color	mils	GA
White	33	20
Yellow	43	18
Green	54	16
Orange	68	14
Red	97	12

Girt Horizontal structural member that supports wall panels and is primarily subjected to bending under horizontal loads, such as wind load.

Grade The finished ground level adjoining the building at exterior walls.

Ground Snow Load Measured load on the ground due to snow accumulation developed from a statistical analysis of weather records expected to be exceeded once every 50 years at a given site.

Gusset Plate A structural member used to facilitate the connection of truss chord or web members at a heel, ridge, or panel point.

Hat-Shape A singly-symmetric shape consisting of at least two vertical webs and a horizontal stiffened flange which is used as a chord member in a truss.

Glossary

Heel Point on a truss at which the top chord and bottom chord intersect at the end of a truss with a sloping top chord.

Hip-Set A sloped roof surface that extends from a roof ridge towards the eave.

Installation Drawings Drawings that show the location and installation of the cold-formed steel structural framing.

Installer Party responsible for the installation of cold-formed steel products.

Joint Area where two or more ends, surfaces, or edges are attached. Categorized by type of fastener or weld used and the method of force transfer.

Lateral Forces Non-gravity forces acting on a building such as wind and seismic.

Lateral Force Resisting System The structural elements and connections required to resist racking and overturning due to wind and/or seismic forces imposed upon the structure in accordance with the applicable building code.

Lateral Load A horizontal force created by wind or earthquake that acts on a structure or its components.

Level Return Filler placed horizontally from the end of an overhang back to the bearing support to form soffit framing.

Live Loads Live loads are transient and sustained loads usually created by people and furnishing, respectively.

Load Force or other action that results from the weight of building materials, occupants and their possessions, environmental effects, differential movement, or restrained dimensional changes.

Load Effect Forces, stresses, and deformations produced in a structural component by the applied loads.

Load Factor Factor that accounts for deviations of the nominal load from the actual load, for uncertainties in the analysis that transforms the load into a load effect, and for the probability that more than one extreme load will occur simultaneously.

LRFD (Load and Resistance Factor Design) Method of proportioning structural components such that the design strength equals or exceeds the required strength of the component under the action of the LRFD load combinations.

LRFD Load Combination Load combination in the applicable building code intended for strength design (Load and Resistance Factor Design).

Material Supplier An individual or entity responsible for furnishing framing materials for the project.

Mil A unit of measurement used in measuring the thickness of thin steel elements. One mil equals 1/1000 of an inch (e.g., 33 mil = 0.033 inch).

Moment Frame Framing system that provides resistance to lateral loads and provides stability to the structural system primarily by shear and flexure of the framing members and their connections.

Multi-Node Analysis A truss analysis methodology when each individual web member at a joint is modeled with its own node.

Multiple Span The span made by a continuous member with intermediate supports.

Nominal Load Magnitude of the load specified by the applicable building code.

Nominal Strength* Strength of a structure or component (without the resistance factor or safety factor applied) to resist the load effects, as determined in accordance with a Specification or Standard.

Overhang The extension of the top or bottom chord of a truss beyond the bearing support.

Panel In a truss, the chord segment defined by two successive joints.

Panel Length The centerline distance between joints measured horizontally.

Panel Point The connection region between a web and chord member.

Peak Point on a truss where two sloped chords meet.

Permanent Load Load in which variations over time are rare or of small magnitude. All other loads are variable loads.

Piggyback Truss. A truss supported directly on top of another truss. Trusses are piggybacked due to height restrictions in fabrication and delivery.

Pitch See Slope.

Pitch Break A location around the perimeter of a truss where the chord changes pitch.

Plans Drawings prepared by the design professional for the owner of the project. These drawings include but are not limited to floor plans, framing plans, elevations, sections, details and schedules as necessary to define the desired construction.

Purlin Horizontal structural member that supports roof deck and is primarily subjected to bending under vertical loads such as snow, wind or dead loads. (May also brace the top chord of trusses in certain applications, resulting in an applied axial force).

Rake The inclined edge of a roof.

Rake Overhang The horizontal projection of the roof measured from the outside face of a gable endwall to the outside edge of the roof.

Rational Engineering Analysis Analysis based on theory that is appropriate for the situation, relevant test data if available, and sound engineering judgment.

Reaction Forces acting on a truss through its supports which are equal (but opposite) to the sum of the dead and live loads.

Release for Construction The release by the owner's representative, permitting the component manufacturer and/or installer to commence work under the contract, including

Glossary

ordering framing material and preparing installation drawings.

Required Strength* Forces, stresses, and deformations produced in a structural component, determined by either structural analysis, for the LRFD or ASD load combinations, as appropriate, or as specified by Specification or Standard.

Resistance Factor, Ψ Factor that accounts for unavoidable deviations of the nominal strength from the actual strength and for the manner and consequences of failure.

Ridge The line formed by the joining of the top edges of two sloping roof surfaces.

Safety Factor, Ω Factor that accounts for deviations of the actual strength from the nominal strength, deviations of the actual load from the nominal load, uncertainties in the analysis that transforms the load into a load effect and for the manner and consequences of failure.

Secondary Bending The bending stress in a member caused by the deflection of the whole truss.

Service Load Load under which serviceability limit states are evaluated.

Shear Wall Wall that provides resistance to lateral loads in the plane of the wall and provides stability for the structural system.

Shop Drawings Drawings for the production of individual component assemblies for the project.

Slope (Pitch) The inches in vertical rise in 12 inches of horizontal run for inclined members, generally expressed as 3/12, 4/12, etc.

Specialty Designer The individual or organization having responsibility for the design of the specialty items. This responsibility shall be in accordance with the state's statues and regulations governing the professional registration and certification of architects or engineers. Also referred to as component designer, specialty engineer, design engineer, registered engineer, and engineer, but hereinafter will be referred to as Specialty Designer. The requirement for a Specialty Designer is typically called out on architectural specifications or structural general notes. The Specialty Designer is typically not the Structural Engineer-of-Record.

Specifications Written instructions, which, with the plans, define the materials, standards, design of the products, and workmanship expected on a construction project.

Specified Minimum Yield Stress Lower limit of yield stress specified for a material as defined by ASTM

Splice The point at which two chord members of the same slope are joined together to form a single member.

Static Load A load or series of loads that are supported by, or are applied to, a structure so gradually that forces caused by change in momentum of the load and structural elements can be neglected and all parts of the system at any instant are essentially in equilibrium.

Strain The geometrical expression of deformation caused by the action of stress on a physical body.

Stress A unit force working within a member, usually expressed in pounds per square inch (psi).

Strongback A load distribution member typically used in a floor truss system and installed perpendicular through the trusses.

Structural Analysis Determination of load effects on members and connections based on principles of structural mechanics.

Structural Component Member, connector, connecting element or assemblage.

Structural Engineer-of-Record The design professional who is responsible for sealing the contract documents, which indicates that he or she has performed or supervised the analysis, design and document preparation for the structure and has knowledge of the requirements for the load carrying structural system.

Structural Sheathing The covering (e.g., plywood, oriented strand board or steel deck) used directly over structural members (e.g., joists) to distribute loads, brace walls, and generally strengthen the assembly.

Sub-Contractor The individual or organization with whom a contractor has contracted to furnishl and/or install a portion of the project.

Tensile Strength (of material) See Ultimate Strength.

Top Chord An inclined or horizontal member that establishes the upper edge of a truss.

Truss A coplanar system of structural members joined together at their ends usually to construct a series of triangles that form a stable beam-like framework.

Truss Designer Also referred to as truss engineer, design engineer and registered engineer, is an individual or organization responsible for the design of cold-formed steel trusses.

Truss Manufacturer An individual or organization engaged in the manufacturing of site-built or in-plant trusses. Also called the Truss Fabricator.

Unbalanced Load Live loads that are applied non-uniformly across the span of the truss. This type of loading is required by most building codes.

Ultimate Strength (Fu) The property of steel associated with the maximum stress that can be developed prior to rupture. Also known as tensile strength.

Uniform Load A total load that is equally distributed over a given length, usually expressed in pounds per square foot (psf).

Valley A depression in a roof where two roof slopes meet.

Valley Set A group of trusses required to fill in a section of a roof. Valley trusses generally have only vertical webs and are supported on top of other trusses.

Glossary

Variable Load. Load not classified as permanent load.

Web Crippling. The localized permanent (inelastic) deformation of the web member subjected to concentrated load or reaction at bearing supports.

Webs. Members that join the top and bottom chords to form the triangular patterns that give truss action, usually carrying tension or compression stresses (no bending).

Web Stiffener. Additional material that is attached to the web to strengthen the member against web crippling. Also called bearing or transverse stiffener.

Yield Strength (Fy). Stress at which a material exhibits a specified limiting deviation from the proportionality of stress to strain as defined by ASTM.

Z-Shape. A point-symmetric or non-symmetric section which is used as a chord member in a truss.

** Terms shown with an asterisk are usually qualified by the type of load effect, for example, nominal tensile strength, available compressive strength, or design flexural strength.*

Sources

- AISC and AISI *Standard Definitions for Use in the Design of Steel Structures*, 2007 Edition
- AIS S100-07: *North American Specification for the Design of Cold-Formed Steel Structural Members*; American Iron and Steel Institute; 2007 Edition with Supplement 2
- AISI-S200-07: *AISI North American Standard for Cold-Formed Steel Framing - General Provisions*; 2007 Edition.
- AISI-S214-07: *AISI Norh American Standard for Cold-Formed Steel Framing - Truss Design,* 2007 Edition.
- *The Encyclopedia of Trusses*, Alpine Engineered Products, Inc.

Definitions presented in this Glossary were compiled and provided solely for the education of the reader. While every effort has been made to keep these definitions accurate, helpful and up-to-date, it is not the intent of this compilation to supplant existing or future regulatory or statutory definitions.

Weights of Materials

Composition Roofing

2-15 lb. and 1-90 lb.	1.75
3-15 lb. and 1-90 lb.	2.2
Felt, 3 ply	1.5
Felt, 3 ply and gravel	5.6
Felt, 4 ply and gravel	6.0
Felt, 5 ply and gravel	6.5
3/4" ceramic or quality tile	10.0
Single-ply (mod. bitumen)	1.0

Misc. Roofing Materials

Roll roofing	1.0
Asphalt shinges	2.0
Book tile (2")	12.0
Cement tile	16.0
Clay tile (w/ mortar)	10.0
Spanish	19.0
Roman	12.0

Misc. Decking Materials

Tectum (1")	2.0
Vermiculite concrete	2.6
Insulrock (1")	2.7

Wood Decking

3/8" plywood	1.1
1/2" plywood	1.5
5/8" plywood	1.8
3/4" plywood	2.3
1-1/8" plywood	3.4
1" sheathing	2.3
2" decking	4.3
3" decking	7.0
4" decking	9.3

Roof Sheathing

3/8" plywood	1.1
1/2" plywood	1.5
5/8" plywood	1.8
3/4" plywood	2.2
1-1/8" plywood	3.3
1" (sheathing) nominal	2.1

Floor

Hardwood (nominal 1")	3.8
Concrete (per 1" of thickness)	
Insulating lightweight	2.5
Lightweight	6.0-10.0
Reinforced	12.5
Linoleum or soft tile	1.5
3/4" ceramic or quality tile	10.0
Terrazo (1.5")	19.0
Cement finish (per 1" thick)	12.0

Corrugated Galvanized Steel Deck (2)

57 mil (16 GA)	3.5
45 mil (18 GA)	2.8
34 mil (20 GA)	2.1
28 mil (22 GA)	1.7
24 mil (24 GA)	1.1
18 mil (26 GA)	1.0

Roll or Batt Insulation

Rock wool (1")	0.2
Glass wool (1")	0.1

Rigid Insulation

Temlock (1")	1.2
Cork	0.7
Gold bond (1")	1.5
Styrofoam (1")	0.2
Foamglass (1")	0.8
Rigid fiber glass (1")	1.5

Ceilings

Acoustical fiber tile	1.0
1/2" gypsum board	2.0
5/8" gypsum board	2.5
Plaster (1" thick)	8.0
Metal suspension system	0.5
Metal suspension with tile	1.8
Wood suspension system	2.0
Wood suspension with tile	2.5

All weights shown in PSF unless noted otherwise.

Weights and dimensions shown are generic - physical properties of actual materials may vary from product to product.

Industry-Best Resources

TrusSteel has created the industry's most complete set of technical resources for the design and application of pre-engineered Cold-Formed Steel trusses. This information is published in several formats that are available to professionals who specify and design with CFS trusses.

www.TrusSteel.com

The TrusSteel Web site is the industry's most comprehensive resource on CFS trusses. Learn the history of Alpine and TrusSteel, find a local Authorized Fabricator, download Standard Details, research UL and code issues, request an AIA/CES seminar and much more. Get TrusSteel information when you need it - 24 / 7 / 365.

Truss Manual CD

TrusSteel also publishes the Manual you are reading as an interactive CD that is available to architects and engineers who specify and design with CFS trusses. The CD contains not only this manual but also the complete library of TruSteel Standard Details in DXF and DWG CAD file formats. To request a copy of the Design Manual CD, just visit www.TrusSteel.com.

TrusSteel Standard Details

TrusSteel maintains this growing library of over 100 details and makes it available, free of charge, to industry professionals. Use these details for reference during design, then cut-and-paste them right into your construction documents.

Guide Specification

The TrusSteel Guide Spec is written in the standard three-part CSI format. This spec is available from our Web site, and from the Design Manual CD, in pure text format that you can cut-and-paste without fear of reformatting your current specs or importing contaminated files.

TrusSteel Authorized Fabricators

Your local Authorized Fabricators can be one of your most valuable resources when you are planning and designing your building. These roof framing specialists can help you realize your design vision in the most economical, easily-built and safe manner. Need information on truss designs, prices and delivery? Need help in working out a difficult roof plan? Your local Authorized Fabricator can help. Go to www.TrusSteel.com to find a Fabricator near you.

For more information, contact: info@TrusSteel.com or go to: www.TrusSteel.com
or call 888-565-9181.

TrusSteel®

a division of ITW Building Components Group

888.565.9181 • www.TrusSteel.com